Title: Mississippi State Department of Health

Part 18: Division of On-site Wastewater

Subpart 77: On-site Wastewater Regulations

Chapter 1. ADMINISTRATIVE

Subchapter 1. General Provisions

Rule 1.1.1 **Legal Authority.** This regulation has been promulgated under the authority of and pursuant to the Mississippi Individual On-site Wastewater Disposal Law (**Section 41-67-1 through 41-67-41, Mississippi Code of 1972, Annotated**)

Source: Miss Code Ann § 41-67-3

Rule 1.1.2 **Definitions.** The terms in this Chapter apply as stated unless otherwise specified for an Individual On-site Wastewater Disposal System (IOWDS)

1. Administrative Fine – a fine imposed by the Department for violation(s) of statute(s), regulation(s) and order(s) of the Department

2. Affidavit (Exemption) – a sworn statement in writing by a Person to the State of Mississippi attesting that an IOWDS is installed and constructed in compliance with **Section 41-67-6(7)**

3. Affidavit (Installation) – a sworn statement in writing by a Certified Installer, Certified Professional Evaluator or Licensed Professional Engineer to the State of Mississippi attesting that an IOWDS is installed, constructed, repaired, or replaced and is in compliance with statutes, requirements, regulations, and permit conditions

4. Affidavit (Maintenance) – a sworn statement in writing by a property owner to the State of Mississippi agreeing to a continuing maintenance agreement on the installed Advanced Treatment System at the end of the required Certified Manufacturer's maintenance agreement

5. Applicant – an owner, lessee or developer

6. Biochemical Oxygen Demand (BOD_5) – a quantitative measure of the amount of oxygen consumed by bacteria while stabilizing, digesting, or treating biodegradable organic matter under aerobic conditions over a five (5) day incubation period; expressed in milligrams per liter (*mg/l*)

7. Carbonaceous Biochemical Oxygen Demand ($CBOD_5$) – a quantitative measure of the amount of oxygen consumed by bacteria while stabilizing, digesting, or treating biodegradable organic matter under aerobic conditions over a five (5) day incubation period while in the presence of a chemical inhibitor to block nitrification; expressed in milligrams per liter (*mg/l*)

8. Commercial Application – notification by an Applicant to the Department prior to construction and submission of all required information, which is used by the Department to initiate the process to evaluate property for the suitability of multiple connections to an IOWDS or multiple IOWDS

9. Continuing Education Unit (CEU) – an educational course provided through the Department or other entities approved by the Department for the purpose of meeting continuing education and/or Professional Development Hours (PDH) required for the Certified Professional Evaluator/Environmentalist, Certified Installer, and Certified Pumper

10. Decentralized Wastewater Treatment System – a IOWDS and/or cluster wastewater disposal system used to treat, disperse, or discharge small volumes of wastewater, generally from dwellings and businesses that are located relatively close together. Decentralized systems in a particular management area or jurisdiction are managed by a common management entity or may be used by a commercial development consisting of fewer than ten (10) lots

11. Department of Environmental Quality – the Mississippi State Department of Environmental Quality, Office of Pollution Control

12. Design-based System – an IOWDS designed and installed in accordance with *Chapter 5: Design Standards*

13. Developer – a Person who develops real estate for residential or commercial use

14. Discharge – to pour forth, emit or release treated effluent on the surface of the property of the generator

15. Division – the Mississippi State Department of Health, Division of On-site Wastewater

16. Engineer-based System – an IOWDS designed by a Person meeting **73-13-23(1)** and submittal meeting *Chapter 2: Certification*

17. Feasibility Study – a written evaluation and analysis of the potential of a proposed project that is based on investigation and research by a Licensed Professional Engineer to give cost comparison between centralized or decentralized treatment and disposal and IOWDS

18. Fecal Coliform – indicator bacteria common to the digestive systems of warm-blooded animals that is cultured in standard tests to indicate either contamination from sewage or the level of disinfection; generally measured as number of colonies/ 100 *ml* or most probable number (MPN)

19. Federal Clean Water Act – federal legislation amended in 1972 to regulate discharges of pollutants into the water of the United States. It gave the *United States Environmental Protection Agency (EPA)* the authority to implement pollution control programs such as setting wastewater standards for industry. The Clean Water Act also continued requirements to set water quality standards for all contaminants in surface waters. The Act made it unlawful for any Person to discharge any pollutants from a point source into navigable waters, unless a permit was obtained under its provision

20. Functioning – an IOWDS that has no hydraulically overloaded soil conditions, seepage or discharge to the surface of the property of the generator

21. Failure – breakage, weakness, or defect that causes a malfunction in the treatment, distribution, disposal, or dispersal of effluent into the soil absorption field, or that causes a wash-out or disruption of the effluent disposal field as evidence by:

    a. Surfacing or ponding of effluent at, over or around any component

    b. Backing up of sewage within the residence or establishment

    c. Contamination of ground or surface waters

22. Individual On-site Wastewater Disposal System – a sewage treatment and effluent disposal system that does not discharge into waters of the state, that serves only one (1) legal tract, that accepts only residential waste and similar waste streams maintained on the property of the generator, and this is designed and installed in accordance with the law and regulations of the Board

    a. New – a Design-based IOWDS installed, inspected and documented by Final Approval

b. Operational – an IOWDS that is being utilized on a daily basis, including the day of inspection, with no evidence of treated effluent leaving the property nor partially treated effluent seeping to the surface

c. Non-operational – an IOWDS that is not in daily use, including the day of inspection

d. Repaired – an existing malfunctioning IOWDS that is operational but requires the restoration or installation of either a treatment or disposal portion

23. Malfunctioning – any IOWDS or component part that fails to operate as intended or not incompliance with regulation or state laws

24. Performance-based System – an IOWDS designed by a Licensed Professional Engineer to meet standards established to designate a level of treatment of wastewater that an IOWDS must meet, including, but not limited to Biochemical Oxygen Demand (BOD), Total Suspended Solids (TSS), nutrient reduction and fecal coliform

25. Portable Toilet (Self-Contained) – a single or multi-unit toilet and holding tank combination system that is required to be collected, removed, transported and disposed by a Certified Pumper

26. Private Water Well – a deep hole or shaft sunk into the earth to obtain potable water for an individual lot, tract or parcel

27. Property of the Generator – land owned by or under permanent legal easement or lease to the generator in perpetuity to the generator, duly recorded in the courthouse

28. Quality Assurance – a program for the systematic monitoring and evaluation of the various aspects of the Department's on-site wastewater program to ensure that standards of quality, laws and regulations are being met

29. Revocation – a permanent withdrawal of rights and privileges granted to the certified entity/Person for a minimum of two (2) years

30. Seeping – wastewater surfacing typically from an underground system as indicated by hydraulically overloaded soil conditions

31. Soil and Site Evaluation – the evaluation to determine if a property can support an IOWDS by use of a soil auger to a depth of five (5) feet to determine the soil texture, color, mottling and Seasonal High Water Table

32. Suspension – temporary withdrawal of rights and privileges granted to a certified entity/Person

33. Total Nitrogen – measure of the complete nitrogen content in wastewater including nitrate (NO_3^-), nitrite (NO_2^-), ammonia (NH_3^-), ammonium (NH_4^+), and organic nitrogen, expressed as *mg/l* of N; all these forms of nitrogen, (as well as nitrogen [N_2]), can be biochemically converted from one form to another and are constituents of the nitrogen cycle

34. Total Phosphorous – sum of all forms of phosphorous in effluent

35. Total Suspended Solids – measure of all suspended solids in a liquid, typically expressed in *mg/l*; to measure, a well-mixed sample is filtered through a standard glass fiber filter and the residue retained on the filter is dried to a constant weight at 217 to 221 degrees F (103 to 105 degrees C); the increase in the weight of the filter represents the amount of total suspended solids

36. Variance – a written agreement between the Department and an Applicant that allows the Applicant to deviate from the rules and regulations of the Board

37. Violation – an act of defying the statues, regulations, orders of the Board, permit conditions or certification standards

38. Wastewater Advisory Council – a group of members who meet with the Department for providing advice on IOWDS

39. Water – public or private waters used for recreation (swimming, skiing, fishing), shellfish harvesting, potable water intake or other situations where people are likely to come into contact with the water

40. Watercourse – any natural lake, river, creek, cut, or other natural body of fresh water or channel having definite banks and bed with visible evidence of the flow or occurrence of water, except such lakes without outlet to which only one (1) landowner is riparian

Source: Miss Code Ann § 41-67-3

Subchapter 2. Treatment and Disposal Requirement

Rule 1.2.1 **Connection**. All places where person(s) reside, are employed and/or congregate there shall be a sanitary method for disposal of all human excreta and other liquid waste

1. Where a Centralized Wastewater Treatment System is available, all places shall have a properly constructed connection to the centralized wastewater treatment system which all human excreta and other liquid waste shall be disposed

2. Where a Centralized Wastewater Treatment System is not available, all human excreta and other liquid waste shall be disposed of into a properly constructed and maintained IOWDS

3. No such system shall be allowed to discharge in a manner, which will jeopardize public health, welfare or the environment

Source: Miss Code Ann § 41-67-3

Rule 1.2.2 **Maintenance**. All IOWDS require periodic maintenance in accordance with the Certified Manufacturer's requirements in accordance with **41-67-10**. All Advanced Treatment Systems must comply with **41-67-7(5)**

Source: Miss Code Ann § 41-67-3

Subchapter 3. Department Staff

Rule 1.3.1 **Responsibility**. The Division, Environmental Health Program Specialist, District Environmentalist, Regional Environmentalist, Environmentalist and Environmentalist Trainee must comply with the following:

1. Division

   a. Attend and conduct all training courses

   b. Provide necessary regulations, forms, documents, and evaluations to determine the suitability of property for an IOWDS and enter the data in the wastewater computer program

c. Provide or deny certifications or registrations issued to Certified Manufacturers, Certified Professional Evaluators, Certified Installers and Certified Pumpers

d. Suspend or revoke certifications for Certified Manufacturers, Certified Professional Evaluators, Certified Installers and Certified Pumpers

e. Review and approve the submittal for all designs submitted by Certified Professional Evaluators or Licensed Professional Engineers

f. Coordinate and provide initial certification, continuing education and training for Certified Professional Evaluators, Certified Installers and Certified Pumpers of IOWDS as outlined in *Chapter 2: Certification*

g. Review submissions and requirements for registration of all specified manufactured wastewater products

h. Promulgate rules and regulations for Design and Performance-based Systems

i. Determine the feasibility of Centralized Wastewater Treatment System for developments

j. Develop and implement policy and procedures

k. Provide technical assistance

l. Coordinate training, continuing education and determine competency of Environmentalist

m. Monitor commercial development/establishments and Performance-based System evaluations, document findings and enter in the wastewater computer program

n. Review, inspect and approve/disapprove Performance-based Systems and enter appropriate data related to system into wastewater computer program

o. Inspect, approve/disapprove all IOWDS prior to issuance of Final Approval

p. Monitor Districts/Counties and Certified Professional Evaluators through the Quality Assurance program implemented by the Division

q. Ensure computer data is accurate and updated for all certifications and registrations

r. Conduct field evaluations on all designs submitted by Certified Professional Evaluators or Licensed Professional Engineers

s. Conduct field inspections on all specified manufactured wastewater products, as deemed necessary

t. Schedule with Hearing Officer within ten (10) working days on all enforcement proceedings for Certified Manufacturers and Certified Professional Evaluators

u. Perform Quality Assurance for Environmentalist and Certified Professional Evaluators

2. District Environmentalist

a. Attend all training courses as outlined by the Division

b. Demonstrate to the Department that **41-67-19** is satisfactorily met

c. Provide supervision over Environmentalist(s) to ensure the design, construction, installation and approval of an IOWDS

d. Suspend or revoke certifications for Certified Installers and Certified Pumpers

e. Inspect, and/or designate inspections of, Certified Pumper's vehicle(s)

f. Verify all information needed prior to performing the Soil and Site Evaluation

g. Ensure that Environmentalist are recommending all approvable options

h. Demonstrate competency as a Certified Professional Evaluator

i. Ensure that all regulations are applied uniformly in their area of the State

j. Monitor and enter all referred encounters and complaints into the wastewater computer program

k. Ensure or perform the Soil and Site Evaluation within five (5) working days of receiving a completed Notice of Intent

l. Ensure or process the Permit/Recommendation within ten (10) working days of the completed Notice of Intent

m. Inspect, approve/disapprove all Design-based Systems prior to issuance of Final Approval

n. Schedule a hearing within the required ten (10) working days on all enforcement proceedings for Certified Installer and Certified Pumper

o. Report findings of all enforcement proceedings for Certified Installer or Certified Pumper to the Division

p. Attend a minimum of four (4) hours of Continuing Education Units endorsed by the Division in a calendar year to maintain certification

3. Regional Environmentalist

a. Attend all training courses as outlined by the Division

b. Demonstrate to the Department that **41-67-19** is satisfactorily met

c. Provide supervision over Environmentalist(s) to ensure the design, construction, installation and approval of an IOWDS

d. Issue notice to suspend or revoke certifications for Certified Installers and Certified Pumpers

e. Inspect, or designate inspections, of Certified Pumper's vehicle(s)

f. Verify all information needed prior to performing the Soil and Site Evaluation

g. Ensure that Environmentalist are recommending all approvable options

h. Coordinate with the District Environmentalist on all enforcement issues

i. Ensure that all regulations are applied uniformly in their area of the State

j. Monitor and/or enter, all referred encounters or complaints into the wastewater computer program

k. Ensure or process the Soil and Site Evaluation within five (5) working days of receiving a complete Notice of Intent

l. Ensure or process the Permit/Recommendation within ten (10) working days of the completed Notice of Intent

m. Inspect, approve/disapprove all Design-based Systems prior to issuance of Final Approval

n. Attend a minimum of four (4) hours of Continuing Education Units endorsed by the Division in a calendar year to maintain certification

4. Environmentalist

a. Attend all training courses as outlined by the Division

b. Demonstrate to the Department that **41-67-19** is satisfactorily met

c. Ensure the design of an IOWDS can be installed and approved

d. Issue notice to suspend or revoke certifications for Certified Installers and Certified Pumpers

e. Inspect Certified Pumper's vehicle(s)

f. Verify all information needed prior to performing the Soil and Site Evaluation

g. Investigate complaints and enforce all applicable statutes, regulations, and certification violation for the Certified Installer and Certified Pumper

h. Coordinate with the Regional Environmentalist on all enforcement issues

i. Perform the Soil and Site Evaluation within five (5) working days of the submittal of a completed Notice of Intent

j. Process the Permit/Recommendation within ten (10) working days of completing the Soil and Site Evaluation

k. Inspect, approve/disapprove all Design-based Systems prior to issuance of Final Approval

l. Initiate all wastewater complaints received within forty-eight (48) hours

m. Monitor and/or enter, all environmental health related encounters and complaints into the wastewater computer program

n. Attend a minimum of four (4) hours of Continuing Education Units endorsed by the Division in a calendar year to maintain certification

5. Environmentalist Trainee

a. Attend all training courses as outlined by the Division

b. Demonstrate to the Department that **41-67-19** is satisfactorily met

c. Perform all Soil and Site Evaluations, existing inspections, collect water samples, and investigate wastewater complaints with Regional/District Environmentalist under the probationary status

d. Demonstrate competency as an Environmentalist/Certified Professional Evaluator

Source: Miss Code Ann § 41-67-3

Subchapter 4. Applicant

Rule 1.4.1 **Responsibilities**. All Applicants must comply with the following:

1. Submitting a Notice of Intent to the Department prior to constructing or placing any mobile, modular or permanently constructed residence, building or facility, which may require the installation of an IOWDS

2. Submit the Permit/Recommendation, for a water service connection (water meter) which is an approved plan for a sewage treatment and disposal system

3. Select an IOWDS to be installed and approved from the option(s) listed on the Permit/Recommendation form

4. Provide the following to the Department after the chosen IOWDS has been installed and inspected:

a. Signed and dated Affidavit (Installation) or if eligible, Affidavit (Exemption)

b. Signed and dated Affidavit (Maintenance), for an Advanced Treatment System only

c. Fee (Final Approval)

Source: Miss Code Ann § 41-67-3

Subchapter 5. New System

Rule 1.5.1 **Prohibited Uses**. Any waste stream that is non-typical residential in its constituents shall be referred to the Mississippi Department of Environmental Quality, Office of Pollution Control

Source: Miss Code Ann § 41-67-3

Rule 1.5.2 **Temporary Use**. Any IOWDS can be installed through Notice of Intent procedure in an area where the Department has written proof from the providing entity that a connection to Centralized Wastewater Treatment System will be available with thirty-six (36) months. Upon completion of the Centralized Wastewater Treatment System, all temporary use systems must be properly abandoned.

Source: Miss Code Ann § 41-67-3

Rule 1.5.3 **Notice of Intent**. Prior to construction or placement of any mobile, modular, or permanently constructed residence which may require the installation of a single residential IOWDS and the need for a "new" water meter or drilling of a "new" private water well, the Applicant shall completed the Notice of Intent and provide the following to the Department:

1. Legal description

2. Plot Plan (plat)

3. Fee

Source: Miss Code Ann § 41-67-3

Rule 1.5.4 **Soil and Site Evaluation**. An Environmentalist will perform an evaluation in accordance with *Chapter 4: Soil and Site Evaluation*

Source: Miss Code Ann § 41-67-3

Rule 1.5.5 **Permit/Recommendation**. Following the Soil and Site Evaluation, the Department will provide a document that indicates a specific type(s) of IOWDS available in order for the Applicant to make an informed decision for meeting a minimum standard of proper treatment and disposal. The Permit/Recommendation is nontransferable and will be valid for one (1) year. The Permit/Recommendation shall be made null and void by the Department if extensive grading occurs or if site/dwelling deviates from the originally submitted Plot Plan (plat).

Source: Miss Code Ann § 41-67-3

Rule 1.5.6 **IOWDS Classifications**. All residential IOWDS must comply with one (1) of the following:

1. Design-based. An IOWDS that meets the following:

    a. Treatment

        i. Septic Tank

        ii. Advanced Treatment System

    b. Disposal

        i. Aggregate

        ii. Aggregate Replacement

        iii. Elevated Sand Mound

        iv. Drip Irrigation

        v. Spray Irrigation (disinfected)

        vi. Overland Discharge (disinfected)

        vii. Non-water borne

2. Engineer-based. An IOWDS that meets the following:

    a. Design-based

    b. Performance-based

3. Performance-based. An IOWDS that is certified by a Licensed Professional Engineer to meet the following minimum effluent standards:

a. BOD_5 – 10 *mg/l*

b. TSS – 10 *mg/l*

c. PO_4-P – 15 *mg/l*

d. NH_4-N – 10 *mg/l*

e. Fecal Coliform – 10,000 *cfu*/1000 *ml*

f. All IOWDS effluent must comply with either the minimum effluent standards unless background water quality is a higher number than these levels. In this case, the background level will become the standard of performance

g. Background water levels and IOWDS effluent must be sampled in accordance with Department guidelines. (To be forthcoming)

Source: Miss Code Ann § 41-67-3

Rule 1.5.7 **Inspection**. All IOWDS which requires a Final Approval must be evaluated and if mechanical, operated to determine the compliance with the applicable regulations

Source: Miss Code Ann § 41-67-3

Rule 1.5.8 **Passed Inspection**. All IOWDS must be installed in compliance with the applicable rules and regulations from *Chapter 1: Administrative, Chapter 2: Certification* and *Chapter 5: Design Standards* or reviewed and found to be in compliance with Engineer or Performance-based System

Source: Miss Code Ann § 41-67-3

Rule 1.5.9 **Failed Inspection**. All IOWDS not meeting the requirements of the regulations must be inspected until passed by the Environmentalist. A fee will be charged for each inspection.

Source: Miss Code Ann § 41-67-3

Rule 1.5.10 **Approval**. The following documentation shall be collected by the Environmentalist prior to issuance of the Final Approval to the Applicant:

1. Inspection (Form 305)

2. Affidavit (Installation)

3. Affidavit (Maintenance), for an Advanced Treatment System only

4. Fee

Subchapter 6. Existing System

Rule 1.6.1 **Classifications**. All IOWDS installed prior to July 1, 2014, shall be grandfathered in until a substantiated complaint is registered or until the property owner requests an inspection

1. Operational

2. Non-operational

Source: Miss Code Ann § 41-67-3

Rule 1.6.2 **Inspection**. An existing IOWDS will be evaluated based on a request from the Applicant, a substantiated complaint or Medical Exception is received by the Department. All Advanced Treatment Systems must be inspected by a Certified Manufacturer's authorized representative and appropriate inspection forms or proof of continuous maintenance agreement must be submitted.

1. Operational

   a. Environmentalist shall make a diligent effort to locate the treatment and disposal area as shown on the Existing System – Application

   b. If there is no evidence of treated effluent leaving the property, nor partially treated effluent seeping to the surface, an Acceptance will be issued to the Applicant

2. Non-operational

   a. A Permit/Recommendation will be provided to the Applicant

Source: Miss Code Ann § 41-67-3

Rule 1.6.3 **Failed Inspection**. For any IOWDS which has evidence of treated effluent leaving the property, or partially treated effluent seeping to the surface, the Applicant shall be issued a letter stating the violation with options for repair. If replacement is required, a Permit/Recommendation will be issued

Source: Miss Code Ann § 41-67-3

Rule 1.6.4 **Approval**. All IOWDS in need of repair that requires approval, must meet the following requirements by upgrading either treatment or disposal:

1. Reduce the volume of effluent

2. Adequately treat the effluent

3. Confine the discharge to the property of the generator

Source: Miss Code Ann § 41-67-3

Rule 1.6.5 **Replacement**. Any malfunctioning IOWDS that will require the installation of both treatment and disposal will require the Applicant to comply with *Subchapter 5. New System*

Subchapter 7. Exception, Exemption and Variance

Rule 1.7.1 **Medical Exception**. A temporary connection made to an operational existing system, provided the flow is not projected to increase significantly and the residence is removed on the date specified in the doctor's statement

Source: Miss Code Ann § 41-67-3

Rule 1.7.2 **Exemption**. Utilization of the exemption by the Applicant, requires the following:

1. Applicant must attest that a single residence will be placed on a single two (2) - acre or larger tract of land during the Notice of Intent process and must acknowledge that they have been informed the following entities may require the Department's Final Approval:

   a. Board of Supervisor (Ordinance)

   b. Water Supplier/Association (Bylaws and/or Water User's Agreement)

   c. Lending Institution

d. Utility Authority

e. Others (subdivision covenants, etc)

Source: Miss Code Ann § 41-67-3

Rule 1.7.3 **Variance**. Applicant may request the review of a Permit/Recommendation which indicates no Design-based IOWDS can be authorized for installation or if the Applicant disagrees with Permit/Recommendation made by the Department

1. Applicant must write and submit a letter to the Director of Office of Environmental Health requesting a review of the property to determine if the current rules and regulations of the Department have created an unforeseen hardship. The following must be included:

   a. Name and mailing address

   b. Telephone number and/or email address

   c. Copy of the Permit/Recommendation

2. Applicant must write and submit a letter to the Director of the Division of On-site Wastewater requesting a review of the design. The following must be included:

   a. Name and mailing address

   b. Telephone number and/or email address

   c. Copy of the Permit/Recommendation

   d. Copy of the report from the Licensed Professional Engineer for a proposed IOWDS that will properly treat and maintain wastewater on the property

   e. Copy of the Licensed Professional Engineer's errors and omissions insurance

Source: Miss Code Ann § 41-67-3

Subchapter 8. Hearing and Appeal Procedure

Rule 1.8.1 **Hearing**. Any Applicant who has been denied an approval or whose property has been declared unsuitable for recommendation of any wastewater disposal system or who has been charged with a violation of this regulation can request a district

hearing in writing within ten (10) days of notification of the denial or violation. A hearing will be scheduled within ten (10) calendar days after the request has been filed. The appellant will be notified in writing of the decision of the District Hearing Officer

Source: Miss Code Ann § 41-67-3

Rule 1.8.2 **Appeal**. The appellant shall have the right to appeal an unfavorable decision to the State Health Officer in writing within ten (10) days of notification of results of the district-level hearing. A hearing will be scheduled within thirty (30) calendar days after the request has been filed. The decision of the State Health Officer or his/her designee as Hearing Officer will be based solely on the oral, written and documentary evidence presented. The appellant will be notified in writing of the decision

Source: Miss Code Ann § 41-67-3

Rule 1.8.3 **Further Appeal**. Any Person who is aggrieved by any final decision of the Board may appeal that final decision to the Chancery Court of the county of the situs in whole or in part of the subject matter. No individual may file a petition for judicial review with a court of competent jurisdiction until a final written decision and order have been issued by the Department

Source: Miss Code Ann § 41-67-3

CHAPTER 2 CERTIFICATION

Subchapter 1 Introduction

Rule 2.1.1 **Purpose:** The purpose of this regulation is to establish a regulatory standards regarding certification of the Manufacturers, Professional Evaluators, Installers, Pumpers, Maintenance Providers, and Qualified Homeowner Maintenance Providers that applies for the design, construction, installation, repair, maintenance, operation, removal and disposal of liquid waste of Individual On-Site Wastewater Disposal Systems.

SOURCE: Miss Code Ann § 41-67-3

Rule 2.1.2 **Authority:** The State Board of Health is authorized to promulgate these rules under and by virtue of Section **41-3-15(1)(b)(ii), (4)(a)(b)(c)(e)(h)(i),** Section **41-3-17** and Section **41-67-1** through **41-67-39, Mississippi Code of 1972, Annotated.**

SOURCE: Miss Code Ann § 41-67-3

Rule 2.1.3 **Definitions:**

1. Advanced Treatment System – an individual on-site wastewater treatment systems that comply with Section 41-67-10.

2. Advanced Treatment Unit Distributor – a person authorized by the registered manufacturer to sell aerobic treatment units to authorized Certified Installer(s) in the State of Mississippi.

3. Advanced Treatment Unit Manufacturer – a person authorized by the *American National Standards Institute/National Sanitation Foundation* (*ANSI/NSF) International Standard Number 40* to construct an aerobic treatment unit that is listed and registered by the State of Mississippi.

4. Alternative techniques/technologies – a technique or technology used to achieve acceptable treatment and dispersal of wastewater through advanced treatment schemes as deemed by the Department.

5. Authorized Representative – an organization, group, individual, or other entity that is authorized by the manufacturer to distribute, sell, install, or service residential wastewater treatment systems.

6. Certification – the act of confirming competency to design, construct, maintain, install, removal and/or disposal of sludge and liquid waste from Individual On-site Wastewater Disposal Systems.

7. Certified Installer – any person who has met the requirements of Section 41-67-25.

8. Certified Maintenance Provider – any person who holds a written certification issued by the Department allowing the person to provide maintenance services associated with approved on-site wastewater treatment and disposal systems.

9. Certified Professional Evaluator – any person who has met the requirements of Section **41-67-35**.

10. Certification Training Program – a program developed by the Mississippi State Department of Health to confirm competency to design, construction, installation, repair, maintenance, operation, and removal and disposal of liquid waste of Individual On-Site Wastewater Disposal Systems.

11. Certified Pumper – a person engaged in the business or practice of removing and disposing of the sludge and liquid waste from Individual On-site Wastewater Disposal Systems.

12. Cleaning – the removal and transportation of septage or other liquid waste from an onsite sewage treatment and disposal system or Portable Toilet (Self-contained) to an approved disposal location.

13. Components – all physical, mechanical, and electrical components of any wastewater disposal system.

14. Continuing Education Unit (CEU) – an educational course provided through the Department or other entities approved by the Department for the purpose of meeting continuing education and/or Professional Development Hours (PDH) required for the Certified Professional Evaluator/Environmentalist, Certified Installer, Certified Maintenance Provider, Qualified Homeowner Maintenance Provider, and Certified Pumper.

15. Conventional System – an Individual On-Site Wastewater Disposal System consisting of a septic tank and subsurface disposal field.

16. Errors and Omission – coverage protecting the insured against legal liability resulting from negligence, carelessness or a failure to act causing property damage or personal injury to others. Coverage may include burglary and theft.

17. General Business Liability Insurance – coverage protecting the insured against legal liability resulting from negligence, carelessness or a failure to act causing property damage or personal injury to others. Coverage may include burglary and theft.

18. Holding Tank – a vessel used to hold effluent for a limited time as specified in Section **41-67-11**.

19. Lime – a dry white powder consisting essentially of calcium hydroxide that is made by treating quicklime with water.

20. Manufacturer – a person operating a business in or doing business in the State of Mississippi that develops, designs and fabricates residential wastewater treatment systems and their components.

21. Maintenance – the inspecting and evaluating of an Advanced Treatment System. The replacement of any component registered with a specific Advanced Treatment System (i.e. aerator, diffuser, control panel, etc.).

22. Monitoring Visit – an inspection performed by the third party certifier to ensure that the manufacturer, distributor and installer are complying with *American National Standards Institute/National Sanitation Foundation* (*ANSI/NSF) International Standard Number 40* requirements.

23. Person - any individual, trust, firm, joint-stock company, public or private corporation (including a government corporation), partnership, association, state, or any agency or institution thereof, municipality, commission, political

subdivision of a state or any interstate body, and includes any officer or governing or managing body of any municipality, political subdivision, or the United States or any officer or employee thereof.

24. Portable Toilet (Self-Contained) – a single or multi-unit toilet and holding tank system combination that is required to be collected, removed, transported and disposed by a Certified Pumper.

25. Qualified Homeowner Maintenance Provider – the current owner of a specific residence where they resides and has met the requirements of the Department of Health regulation.

26. Surety – a three-party agreement where the insurer agrees to pay a second party (the obligee) or make complete an obligation in response to the default, acts or omissions of a third party (the principal).

27. Third Party Certifier – a certifying program which complies with the following provisions for systems which it has certified to be installed in Mississippi:

    a. Be accredited by the *American National Standards Institute* (*ANSI)*.

    b. Have established procedures which send representatives to distributors in Mississippi on a recurring basis to conduct evaluations to assure that distributors of certified advanced treatment systems are providing proper maintenance, have sufficient replacement parts available and are maintaining service records.

    c. Notify the Department of the results of monitoring visits to manufacturers and distributors within 60 calendar days of the conclusion of the monitoring.

    d. Submit completion reports on testing and any other information as the Department may require for its review.

SOURCE: Miss Code Ann § 41-67-3

Rule 2.1.4 **Registered Manufacturer:** A person may operate as a Manufacturer in the State of Mississippi if they hold a valid certification of registration.

SOURCE: Miss Code Ann § 41-67-3

Rule 2.1.5 **Products:**

1. Treatment

    a. Advanced Treatment Units

    b. Septic Tanks

c. Holding Tanks

d. Non-water borne Systems

e. Alternative wastewater technology

2. Disposal

a. Aggregate Replacement

b. Subsurface Drip

c. Spray Irrigation

d. Alternative wastewater technology

3. Disinfection

4. Effluent Filter

SOURCE: Miss Code Ann § 41-67-3

Rule 2.1.6 **Requirements:** It is unlawful for a Manufacturer of an Individual On-site Wastewater Disposal System or alternative treatment or disposal components to operate a business in or to do business in the State of Mississippi without holding a valid manufacturer's registration issued by the Department.

SOURCE: Miss Code Ann § 41-67-3

Rule 2.1.7 **Application**: All Manufacturers must annually complete and submit the following:

1. Application;

2. Listing and identification of all Fabricators and Distributors of their products and a list of authorized Certified Installers and Certified Maintenance Providers;

3. Contact information of all technical staff providing training;

4. Electronic or detailed drawing(s), construction material(s), installation and/or homeowner manual(s) of each product; and

5. Fee.

SOURCE: Miss Code Ann § 41-67-3

Rule 2.1.8 **Treatment:**

1. Advanced Treatment

a. Registration and requirements for testing and listing of manufacturers of advanced treatment systems:

b. Documentation, from a Third Party Certifier accredited by the American National Standards Institute that the manufacturer's product has successfully completed the testing and listing process as outlined in *American National Standards Institute/National Sanitation Foundation* (*ANSI/NSF) International Standard Number 40* and/or 245 or later edition.

c. On or before **October 1, 1996** each Manufacturer not currently tested and listed by a Third Party Certifier, accredited by the American National Standards Institute, shall submit to the Department evidence that such manufacturer has commenced the testing/listing process. Within 9 months after the submission of such evidence, each Manufacturer must have completed the testing/listing process.

d. Each manufacturer must have established procedures which send representatives to a minimum of 10 percent of its distributors in Mississippi on an annual basis to conduct evaluations to assure the distributor of certified advanced treatment systems is providing proper maintenance, has sufficient replacement parts available and is maintaining service records. Annual monitoring reports, from the manufacturer and Third Party Certifier must be submitted to the Division prior to re-registration.

SOURCE: Miss Code Ann § 41-67-3

Rule 2.1.9 **Third Party Certifier:**

1. Advanced treatment systems and other treatment technologies may be installed only if they have been tested and listed by a third party certifying program. Such advanced treatment systems shall be in compliance with standards for Class I systems as defined by the most current revision of *American National Standards Institute/National Sanitation Foundation (ANSI/NSF) International Standard Number 40*, hereby incorporated by reference. An approved third party certifying program shall comply with the following provisions in order for systems which it has certified to be installed in Mississippi:

   a. On and after **October 1, 1996** an approved Third Party certifying program shall be accredited by the *American National Standards Institute (ANSI).*

   b. Have established procedures, which send representatives to a minimum of 1 distributor of each Manufacturer in Mississippi on an annual basis to conduct evaluations to assure the distributor of certified advanced treatment systems is providing proper maintenance, has sufficient replacement parts available and is maintaining service records.

c. Notify the Division of the results of monitoring visits to manufacturers and distributors within 60 calendar days of the conclusion of the monitoring.

d. Submit completed reports on testing and evaluation of each advanced treatment system verifying compliance with *American National Standards Institute/National Sanitation Foundation* (*ANSI/NSF) International Standard Number 40*. Such reports shall include but not be limited to the following:

i. Materials

ii. Design and construction

iii. Performance requirement (BOD, TSS, pH)

iv. Operation and maintenance

e. The Third Party certifying entity must be disassociated with, and have no vested interest in, the manufacturer to which certification services are provided.

f. Information including specifications of each system and/or component part of the system as deemed necessary by the Department for review.

g. Design, construction and reinforcement must comply and conform to applicable rules and regulations of *Chapter 5 Subchapter 1*.

i. Septic tanks - The Division shall review, including an on-site inspection, the plans, specifications, and construction criteria and shall determine them to be in compliance with the regulation.

h. Design, construction and reinforcement must comply and conform to applicable rules and regulations of *Chapter 5 Subchapter 1*.

i. Holding tanks - The Division shall review, including an on-site inspection, the plans, specifications, and construction criteria and shall determine them to be in compliance with the regulation.

i. Design, construction and reinforcement must comply and conform to applicable rules and regulations of *Chapter 5 Subchapter 1*.

i. Non-waterborne System – Third Party certification that product has successfully completed testing and listing process as outlined in *American National Standards Institute/National Sanitation Foundation* (*ANSI/NSF) International Standard Number 41*.

2. Alternative Wastewater Technology - Treatment and/or disposal systems/products must be documented, reviewed and by the Division to verify compliance with the applicable standards.Disposal: All Manufacturers must provide a copy of installation and/or homeowner manual(s) for each of their products. Hydraulic calculations on an alternative system installation on all products that may be required to be pressurized as part of the dispersal process this includes but not limited to, Subsurface Drip, Spray Irrigation, Elevated Sand Mound, and normally gravity fed dispersal systems that would have to be pressurized. List of all component parts authorized for use in the installation of the product including but not limited to, elbows, connectors, geo-textile fabric, and methods of equal distribution.

   a. Aggregate Replacement System – The Division shall review, including an on-site inspection(s) if deemed necessary, the plans, specifications and construction criteria and shall determine them to be in compliance with the regulation. The Division shall require a complete design from primary treatment to disposal for the minimum and maximum sized system, this shall also include, pump chamber, pump chamber alarm(s), pump(s), filter(s), valve(s), air release(s), aggregate replacement product and connector(s).

   b. Subsurface Drip - The Division shall review, including an on-site inspection(s) if deemed necessary, the plans, specifications and construction criteria in order to determine compliance with the regulation. The Division shall require a complete design from primary treatment to disposal, this shall also include, pump chamber, pump chamber alarm(s), pump(s), filter(s), valve(s), air release(s), tubing and connector(s). This must be presented as a total package with hydraulics for the minimum and maximum sized system.

   c. Spray Irrigation - The Division shall review equipment intended to be utilized in the construction of spray irrigation systems to verify compliance with the regulation. The Division shall require a complete design from primary treatment to disposal, to include, pump chamber, pump chamber alarm(s), pump(s), filter(s), valve(s), spray head(s) and connector(s). This must be presented as a total package with hydraulics for the minimum and maximum sized system.

   d. Alternative Wastewater Technology - All alternative wastewater treatment and/or disposal systems/products must be documented and reviewed by the Division to verify compliance with the applicable standards.

3. Disinfection - The Division shall review, including an on-site inspection(s) if deemed necessary, the plans, specifications and construction criteria and shall determine them to be in compliance with the regulation. The Division shall require a complete design from primary treatment to disposal.

4. Effluent Filter – Design and construction must comply and conform to applicable rules and regulations of Chapter 5 Subchapter 1.

SOURCE: Miss Code Ann § 41-67-3

Rule 2.1.10 **Responsibilities: Manufacturer**

1. All Manufacturers must demonstrate that all processes necessary to comply and conform to Regulations and Manufacturer specifications by the following:

2. Provide documentation to the Division necessary for registration to include testing and listing of manufacturers of Advanced Treatment Systems.

3. Provide documentation on the maintenance agreement for any alternative on-site wastewater disposal system, with a copy of the maintenance agreement outlining the type of service, length of service and frequency of service to be provided.

4. Notify the Division of the results of monitoring visits to manufacturers and distributors within 60 calendar days of the conclusion of the monitoring.

5. Provide technical trained staff to the Division for utilization during the on-site maintenance training program for all alternate disposal systems certified in Mississippi.

6. Provide documentation that an installer of Alternative Systems or products has been trained as a factory-trained and authorized representative and must furnish documentation to the Division certifying the satisfactory completion of factory training and the establishment of the installer as an authorized manufacturer's representative.

SOURCE: Miss Code Ann § 41-67-3

Rule 2.1.11 Responsibilities: Fabricators

1. All Fabricators must demonstrate that all processes necessary to comply and conform to Regulations and Manufacturer specifications by the following:

2. Provide documentation of all concrete purchases, concrete providers, types of reinforcement and date of fabrication.

3. Provide documentation that the mold meets the Manufacturer’s specifications and indicate location of Mississippi State Department of Health registration ID.

4. Provide documentation from Manufacturer that annual inspection has been made on the product.

5. Provide a list of Distributors and Certified Installers authorized by the Manufacturer to install the product.

SOURCE: Miss Code Ann § 41-67-3

Rule 2.1.12 Expiration: Manufacturer certifications shall expire on **December 31** unless suspended or revoked.

SOURCE: Miss Code Ann § 41-67-3

Rule 2.1.13 Renewal

1. A Manufacturer may apply for renewal not more than 60 calendar days prior to the expiration of his Manufacturer certification. If more than 31 calendar day have elapsed from **December 31**, the Department shall require an Applicant to comply with the provisions of initial certification. Suspended certifications are not renewable until reinstated by the Department; revoked certifications cannot be renewed.

2. A Manufacturer shall file a complete application in a form provided by the Division and pay the application fee.

3. Submittal Reports

    a. Provide proof and certification that Manufacturer has factory trained installers or other factory representatives to educate the homeowner with the necessary knowledge to provide maintenance to the homeowner's system, thus allowing the homeowner to meet the requirements of Section **41-67-6(8)**.

    b. Provide documentation when a Certified Installer of alternative systems or products has been factory-trained and listed as an authorized representative.

    c. Provide notification to the Division within 10 working days whenever the Manufacturer no longer authorizes any Certified Installer, Certified Maintenance Provider or Qualified Homeowner Maintenance Provider.

    d. Provide notification of any changes made to a product by following Section 103.04. If a Third Party Certifier must approve the change, this documentation must be submitted to Division prior to the implementation of the changes approved by the Third Party.

SOURCE: Miss Code Ann § 41-67-3

Rule 2.1.14 Informal Fact Finding and Hearing

1. Whenever the Department intends to take action to suspend or revoke a Manufacturer’s certification, there must be an informal fact finding conference before the Department, where proper notice has be given to the affected party.

a. The Manufacturer shall be notified in writing. The notice must be hand delivered or sent by certified mail. The notice must provide the factual and legal basis for the contemplated action and must give the date, time, place, and location of the informal fact finding conference.

b. The informal fact finding conference is to be conducted by the Department. The conference shall be conducted in accordance with, but is not limited to, the requirements of *Administrative Procedural Code of Mississippi* and may include the creation of a verbatim or summary record of the proceedings.

c. The Department shall render a decision based on the informal fact finding conference in a timely manner, and shall as deemed appropriate initiate suspension or revocation proceedings in accordance with regulations.

d. When action is taken to suspend a Manufacturer's certification, that suspension shall be for a specified period of time. Remedial actions including, notification by Third Party Certifier that manufacturer has corrected all deficiencies, updating or modifying training procedures, and correction to components of any registered product as may be specified in the suspension notice.

SOURCE: Miss Code Ann § 41-67-3

Rule 2.1.15 **Penalties:**

1. The Department may suspend or revoke a Manufacturer certification for failure to comply with any law administered by the Board, Department, any regulations of the Board, any order of the Board or Department after due notice.

2. Actions that may result in suspension or revocation include, but are not limited to, falsifying any document, and any act of misrepresentation.

3. If any person or contractor fails to comply with all requirements and regulations in the installation of the system, the Board, after due notice and hearing, may levy an administrative fine not to exceed Ten Thousand Dollars ($10,000.00). Each wastewater system installed not in compliance with this chapter or applicable rules and regulations of the Board shall be considered a separate offense.

SOURCE: Miss Code Ann § 41-67-3

Rule 2.1.16 **Reinstatement:** A person, whose Manufacturer certification has been revoked, pursuant to statutes or regulations, may apply to the Division for reinstatement as a Manufacturer no sooner than 2 years after the effective date of the revocation. Reinstatement of a Manufacturer certification shall include:

1. An application, fee and statement (if applicable) that no activities took place after certification was revoked.

2. Provide documentation that the Applicant has satisfactorily completed any remedial actions required as a result of the revocation. Remedial actions including, notification by Third Party Certifier that manufacturer has corrected all deficiencies, updating or modifying training procedures, and correction to components of any registered product as may be specified in the suspension notice.

SOURCE: Miss Code Ann § 41-67-3

Rule 2.1.17 **CERTIFIED PROFESSIONAL EVALUATOR:** Nothing in this chapter shall preclude a Certified Professional Evaluator or registered Professional Engineer from providing services relating to the design of an Individual On-site Wastewater Disposal System to comply with this chapter, except for Performance-based Systems. A Certified Professional Evaluator or registered Professional Engineer shall notify the department in writing of those services being provided, including the type of treatment, the type of disposal, and the property address for the treatment and disposal system. Construction or installation shall not begin prior to authorization by the department. The department shall respond within ten (10) business days with authorization that the Certified Professional Engineer or registered Professional Engineer fulfills the requirements of the law.

SOURCE: Miss Code Ann § 41-67-3

Rule 2.1.18 **Requirements:**

1. A person may not operate as a Certified Professional Evaluator in this state unless the Department currently certifies that person.

2. A person must meet 1 of the following requirements, in addition to the additional requirements set forth in other sections of this chapter and rules and regulations of the Board, in order to be eligible to become a Certified Professional Evaluator:

    a. Be a professional Geologist registered in the State of Mississippi;

    b. Be a Professional Soil Classifier licensed in the State of Mississippi; or

    c. Be a person who possesses a demonstrable, adequate and appropriate record of professional experience and/or training as determined by the Department.

3. The Division shall issue a certification to a Certified Professional Evaluator if the Certified Professional Evaluator:

    a. Completes an application form that complies with this chapter and rules adopted under this chapter;

    b. Satisfactorily completes the Certified Professional Evaluator training program provided by the department;

c. Provides proof of having an errors and omissions policy or surety in effect with liability limits of at least Fifty Thousand Dollars ($50,000.00) per occurrence and at least One Hundred Thousand Dollars ($100,000.00) in total aggregate amount; and

d. Pays the annual certification fee.

4. Performance-based systems may only be designed by registered Professional Engineer.

SOURCE: Miss Code Ann § 41-67-3

Rule 2.1.19 **Application:** Any specified person may apply to the Division for certification if:

1. Complete application is filed;

2. Passes written and field examinations;

3. Submits 3 professional references; and

4. Pays fee

5. Those holding a current certificate as a Professional Engineer from the Mississippi Board of Licensure for Professional Engineers and Surveyors shall be eligible to provide services without a certificate as a Certified Professional Evaluator.

6. Demonstrates and provides documentation to the satisfaction of the Division, that he/she has a minimum of 1 year of full-time experience evaluating soil and site conditions for Individual On-site Wastewater Disposal Systems in Mississippi in accordance with the Board of Health's regulations and a 4 year college degree in a related study in science or engineering, and shall be eligible to receive a certificate as an Professional Evaluator provided:

   a. The Applicant successfully completes a training program or programs designated and approved by the Division; and

   b. The Applicant successfully completes the written and field examinations approved by the Division.

7. Demonstrates to the satisfaction of the Division that he has a minimum of 2 years of full-time experience evaluating soil and site conditions for Individual On-site Wastewater Disposal Systems in Mississippi in accordance with the Board of Health's regulations and a 2 or 4 year college degree shall be eligible to receive a certificate as a Professional Evaluator provided:

   a. The Applicant successfully completes a training course or courses designated and approved by the Division;

b. The Applicant passes the written and field examinations; and

c. The Applicant provides a written statement signed by a current or former supervisor or a Certified Professional Evaluator with a current certification stating that the person is sufficiently experienced to become a Professional Evaluator.

8. Demonstrates to the satisfaction of the Division that he/she has a minimum of 3 years experience evaluating soil and site conditions for Individual On-site Wastewater Disposal Systems in Mississippi in accordance with the Board of Health's regulations shall be eligible to receive a certificate as a Professional Evaluator provided:

a. The Applicant successfully completes a training program or programs designated and approved by the Division,

b. The Applicant successfully completes the written and field examinations approved by the Division, and

c. The Applicant provides a written statement signed by a current or former supervisor or a Certified Professional Evaluator with a current certification stating that the person is sufficiently experienced to become a Professional Evaluator.

9. Qualification review

a. The Department shall review applications and determine if the Applicant is eligible for the examination.

b. Applicants who have been determined ineligible for any reason may request further consideration by submitting, in writing, evidence of additional qualifications, training, or experience to the Department for further review. No additional fee will be required provided the additional information is submitted and received within 1 year from the date the original application. After such period, a new application shall be required.

c. If the Department finds that the Applicant has not met the minimum requirements for certification as a Professional Evaluator, the Applicant shall be sent written notification, by certified mail or hand delivered, stating the reasons for denial of the certification. The notice to the Applicant of denial shall also state that the Applicant has the right to a hearing to challenge the certification denial. Any request for a hearing must be received by the Department within 30 calendar days of the affected party's receipt of written notice of the decision.

d. Before approving a Professional Evaluator application, the Department may make further inquiries and investigations with respect to the

qualifications of the Applicant and all references, etc. to confirm the information supplied. A personal interview with the Applicant may also be requested.

10. Those persons taking written and field examinations specified in Section **41-67-1 23(2)(b)** shall pay a fee for such testing as determined by the Department based on the actual costs of preparing and administering the examinations.

SOURCE: Miss Code Ann § 41-67-3

Rule 2.1.20 Training Program and Examination

1. Basic Soils Training will be a 1 week course focusing on soil principles and evaluation techniques, specifically focusing on evaluating soils for use with on-site wastewater disposal.

2. Advanced Soils Training will be a 2 day field course with the candidate in the location or area of expertise. General soil conditions of the specific area will be reviewed.

3. On-site Wastewater Disposal System training will be a 1 week course focusing on the design, placement, operation and maintenance of on-site systems. Department will select sites for candidates and provide access to 5 proposed on-site wastewater disposal system sites. The candidate will provide soil information along with their written recommendation(s) for these sites. These 5 proposed recommendations will be evaluated by the Division of On-site Wastewater and using the Mississippi State Department of Health Wastewater Quality Assurance Review Process.

    a. The candidate must score 80% or better to receive a probation certification. All sites done under a probation certification must be evaluated by the Division before an approval is given.

    b. A permanent certification will be issued after his/her first 10 sites are evaluated and scores of 80% or higher are achieved.

4. Certifications shall be revoked when an individual's work is evaluated and their overall evaluated sites score less than 90% in the Mississippi State Department of Health, Division of On-Site Wastewater Quality Assurance Review Process.

5. Certified Professional Evaluator certificates are subject to immediate revocation if a recommendation is made that violates Mississippi State Law or regulation(s).

SOURCE: Miss Code Ann § 41-67-3

Rule 2.1.21 Responsibilities

1. Provide complete information, including all applicable requirements and regulations on all systems recommended to the owner, lessee or developer which shall have the right to choose among systems.

2. Notify the Department at least 48 hours before beginning construction if acting as the Certified Installer of an Individual On-site Wastewater Disposal System and, at that time, schedule a time for inspection of the system with the appropriate county Department of Health.

3. Provide a signed affidavit and any additional required documentation that the system was installed in compliance with all requirements, regulations and permit conditions applicable to the system installed. This applies only if the Certified Professional Evaluator is acting as the Certified Installer. The Affidavit must be given to the Applicant of the Notice of Intent.

4. Furnish proof of certification to a property owner or the owner's representative of the property before performing a site evaluation of the property on which an individual on-site wastewater disposal system is to be designed, constructed, repaired or installed by the Certified Professional Evaluator and to the Department or its authorized representative, if requested.

5. Notify the Department of any change in address, business partnership or affiliation, or any other status that affects his standing as a Professional Evaluator. Such notice must be in writing and must be delivered to the Department within 10 working days.

6. Shall not knowingly associate in a business venture with, or permit the use of the Professional Evaluator's name or firm name by, any person or firm where there is reason to believe that person or firm is engaging in activity of a fraudulent or dishonest nature or is violating any law or regulations of the Department.

7. Except as provided in paragraph 9 of this section, a Certified Professional Evaluator shall not utilize the evaluations, design, drawings or work of another Certified Professional Evaluator without the knowledge and written consent of the Certified Professional Evaluator or organization of ownership that originated the design, drawings or work. In the event that the Certified Professional Evaluator who generated the original document is no longer employed by the firm retaining ownership of the original documents or is deceased, another Certified Professional Evaluator who is a partner or officer in the firm retaining ownership of the original documents may authorize utilization of the original documents by another Certified Professional Evaluator or firm. This fact must be disclosed to the Department when submitting applications supported by Certified Professional Evaluator materials and certifications.

8. Utilizing information contained in the Department records, on which a decision to approve or refer a site has been made, shall be considered to be in the public

domain and may be utilized by a Certified Professional Evaluator without permission.

9. Provide information, if utilizing information in the Department's files or has received permission to modify or otherwise utilize the evaluation, design, drawings or work of another Certified Professional Evaluator may certify that work only after a thorough review of the evaluation, design, drawings or work and after he determines that he is willing to assume full responsibility for all design, drawings or work on which he relies for his opinion.

10. Public

    a. False Statement(s)

    b. A Certified Professional Evaluator shall not knowingly fail to disclose a material fact requested in connection with an application submitted to the Department by himself or any other individual or business entity for certification, renewal or reinstatement.

    c. Conflicts of interest

    d. The Certified Professional Evaluator shall promptly and fully inform an employer or client of any business association, interest, or circumstance or circumstances that may influence the Certified Professional Evaluator's judgment or the quality of service.

    e. Good standing

    f. A Certified Professional Evaluator certified to practice soil and site evaluations or to design Individual On-site Wastewater Disposal Systems in other jurisdictions shall be in good standing and shall not have had a certificate suspended, revoked or surrendered in connection with a disciplinary action or have been the subject of discipline in another jurisdiction.

11. Submittal Reports

    a. System Application

        i. The Certified Professional Evaluator must submit appropriate residential or commercial application to the Division with evaluation and design documentation.

        ii. Applications that are incomplete or substandard, in any manner, shall be returned to Applicant. The Applicant and Certified Professional Evaluator will be notified of any deficiencies. If an application has been returned, the Applicant or his agent may submit a new application to correct the deficiency or deficiencies contained in

his first application. If the application is received within 45 days of the first, the Division will waive all fees associated with the new application. This waiver may be granted not more than once per site.

iii. No Certified Professional Evaluator shall certify a site evaluation and/or design unless such evaluation and/or design comply with the minimum requirements of the Regulations and such certification and/or design is produced in accordance with this chapter. A Certified Professional Evaluator shall make a good faith effort to secure complete, accurate, and timely information regarding site and soil conditions, including relevant factors on adjacent parcels, including but not limited to utilities, water supplies, and other sewage systems. The Certified Professional Evaluator shall certify that all information submitted is true and correct to the best of his knowledge and shall be required to be aware of all information in agency files pertaining to the site he is certifying.

iv. Any system proposed for authorization in accordance with performance standards must be designed and certified by a Professional Engineer registered in the State of Mississippi who is a Certified Engineer Evaluator.

b. Soil and Site Evaluation

i. All soil and site evaluation reports submitted to the Department shall be in a form approved by the Division, shall contain the minimum information specified by the Division, and shall be certified as fully complying with the Regulations. A statement approved by the Department shall be used to certify that a site evaluation and/or design comply with the Board's regulations for on-site sewage systems. No approval shall be granted pursuant to this chapter for any site that has not been certified by a Certified Professional Evaluator.

ii. Additional information may be included with a Certified Professional Evaluator submission in order to facilitate processing the application. However, for the purposes of a Certified Professional Evaluator certifying that an evaluation and/or design complies with the Regulations and "deemed approvable" only those requirements contained in the regulations are considered to apply unless a local government has requested the Department to implement a more restrictive local ordinance. Wastewater system sites proposed for use must be defined in a manner that allows them to be identified on the plat with the accuracy and precision of 3 feet or less.

c. Design: A complete design packet must contain the following:

i. Legal description

ii. Plat showing location and/or dimensions of: Water supply, residence, property, sensitive waters (if applicable), and setbacks on contours with 2 foot intervals (if applicable);

iii. Soil Profile Sheet and location of each soil boring

iv. Individual On-Site Wastewater Disposal System chosen by the Applicant

v. Individual On-site Wastewater Disposal System option(s).

12. Design calculations used to establish the design parameters of the recommended system, including the minimum information deemed appropriate by the Division;

13. Provide 2 sets of construction drawings and specifications for the recommended system in accordance with statutes and regulations;

14. A statement stamped and certified by the Certified Professional Evaluator that the site and soil conditions and design conform to the Regulations.

15. Additional information based on standard procedures can be submitted when a Certified Professional Evaluator believes it may be in the interest of public health, the environment, or the client.

d. Field Analysis

i. The Department is not required to perform a field analysis of Certified Professional Evaluator evaluations and designs prior to issuing a Permit/Recommendation approval; however, the Department may conduct a field analysis, as deemed necessary to protect public health, and to insure licensure integrity. Whenever a field analysis is performed, the Department shall make a record of the results.

SOURCE: Miss Code Ann § 41-67-3

Rule 2.1.22 Expiration: Professional Evaluator certifications shall expire on **June 30**, unless revoked or suspended.

SOURCE: Miss Code Ann § 41-67-3

Rule 2.1.23 Renewal: A Certified Professional Evaluator may apply for renewal not more than 60 calendar days prior to the expiration of his Certified Professional Evaluator certification. **Note:** If more than 31 calendar day have elapsed from the expiration

of the most recent certification, the Department shall require an Applicant to comply with the provisions of initial certification.

1. Any person applying for renewal shall file with the Division:

   a. Completed application;

   b. Proof of CEU(s) credit;

   c. Proof of Errors and Omissions Policy or Surety;

   d. Fee.

SOURCE: Miss Code Ann § 41-67-3

Rule 2.1.24 Informal Fact Finding and Hearing

1. Whenever the Department intends to take action to suspend or revoke a Professional Evaluator certification, there must be an informal fact finding conference and proper notice must be given to the affected party.

   a. The Professional Evaluator shall be notified in writing. The notice must be hand delivered or sent by certified mail. The notice must provide the factual and legal basis for the contemplated action and must give the date, time, place, and location of the informal fact finding conference.

   b. The informal fact finding conference is to be conducted by the Board of Certified Professional Evaluators. The conference shall be conducted in accordance with, but is not limited to, the requirements of *Administrative Procedural Code of Mississippi* and may include the creation of a verbatim or summary record of the proceedings.

   c. The Department shall render a recommendation from the informal fact finding conference within 30 calendar days. Such recommendations shall be sent to the Division upon which appropriate enforcement action shall be initiated.

   d. When action is taken to suspend a Professional Evaluator certification, that suspension shall be for a specified period of time. Remedial actions including, but not limited to, additional training courses, additional testing, and reevaluation of a site and/or redesign of an Individual On-site Wastewater Disposal System.

SOURCE: Miss Code Ann § 41-67-3

Rule 2.1.25 Penalties

1. The Department may suspend or revoke a certification for failure to comply with any law administered by the Board, Department, any regulations of the Board, any order of the Board or Department after due notice from the Department.

2. Actions that may result in suspension or revocation include, but are not limited to; certifying as suitable a site that does not comply with the minimum requirements of the Regulations, falsifying any document, and any act of misrepresentation made related to Professional Evaluator activities.

3. If any person operates in the state as a Certified Professional Evaluator without certification by the Board, the Board, after due notice and opportunity for a hearing, may impose a monetary penalty not to exceed Ten Thousand Dollars ($10,000.00) for each violation.

SOURCE: Miss Code Ann § 41-67-3

Rule 2.1.26 Reinstatement: Any person whose certification has been revoked may apply to the Division for reinstatement no sooner than 2 years after the effective date of the revocation. Reinstatement of a Certified Professional Evaluator's certification shall include:

1. An application, fee and statement (if applicable) that no activities took place after certification was revoked.

2. Documentation that the Applicant has satisfactorily completed any remedial actions required as a result of the revocation. Remedial actions including, but not limited to, additional training courses, additional testing, and reevaluation of a site and/or redesign of an on-site sewage system may be specified as conditions for reinstatement.

3. At least 10 sites must be evaluated using the Department's Quality Assurance Review Process in the first year. All sites must score at least 80% with no violation of Mississippi State Law or Mississippi State Department of Health regulation which promotes the violation of state law.

SOURCE: Miss Code Ann § 41-67-3

Rule 2.1.27 **CERTIFIED INSTALLER:** A Certified Installer can construct, install, repair, replace, service or maintain an Individual On-Site Wastewater Disposal System, upon which he has been certified by the Manufacturer. This will include the construction, installation, and repair or replace of any sewage treatment and disposal system.

1. A person may not operate as a Certified Installer of Individual On-Site Wastewater Disposal Systems unless the Division currently certifies that person.

2. A person who installs a Conventional (septic tank and aggregate disposal) Individual On-site Wastewater Disposal System on his own property for his

primary residence must comply with all Sections except for Rules 2.1.27.1, 2.1.28, 2.1.29.3, 2.1.29.8 and 2.1.30.

SOURCE: Miss Code Ann § 41-67-3

Rule 2.1.28 **Certified Installer Requirements:**

1. The Board shall issue a certification to an installer if the installer:

   a. Completes an application form that complies with this chapter and rules adopted under this chapter;

   b. Satisfactorily completes the training program provided by the Division;

   c. Provides proof of having a valid General Business Liability Insurance policy in effect with liability limits of at least Fifty Thousand Dollars ($50,000.00) per occurrence and at least One Hundred Thousand Dollars ($100,000.00) in total aggregate amount; and

   d. Pays the annual certification fee.

SOURCE: Miss Code Ann § 41-67-3

Rule 2.1.29 **Certified Installer Application:**

1. A person may apply for certification by filing a complete application provided by the Division, attending and satisfactorily completing training program, providing proof of General Business Liability Insurance and paying the application fee in accordance with Section **43-3-15(4)(e)**.

2. Prior to receipt of a certification, the Applicant shall complete an examination, demonstrating his knowledge and comprehension of the Individual On-site Wastewater Disposal System Regulations. Within 30 days of passing the examination, the Certified Installer must submit Insurance and fee.

3. Certificates issued in accordance with this regulation shall not be transferable. Nothing within this regulation shall be construed to limit the power of any municipal, county, or governmental entity to enforce other license requirements or additional measures for the restrictions of persons in the business of constructing, installing, repairing and replacing any Individual On-Site Wastewater Disposal System(s).

SOURCE: Miss Code Ann § 41-67-3

Rule 2.1.30 **Certified Installer Responsibilities:**

1. May not design, construct or install, or cause to be designed, constructed or installed an Individual On-site Wastewater Disposal System that does not comply

with this chapter and rules and regulations of the Board.

2. Provide documentation and certification from the Manufacturer that a Certified Installer of alternative systems or products has been factory-trained and listed authorized representative.

3. Furnish proof of certification to a property owner, lessee, the owner's representative or occupant of the property on which an Individual On-Site Wastewater Disposal System is to be designed, constructed, repaired or installed by that Certified Installer and to the Department or its authorized representative, if requested.

4. Notify the Department at least 24 hours before beginning construction of an Individual On-site Wastewater Disposal System and, at that time, schedule a time for inspection of the system with the appropriate county Department.

5. Shall be present on the jobsite at the time of the scheduled inspection.

6. Covering his work with soil or other surface material unless the installer has received authorization to cover the system after an inspection by a county Department of health inspector.

7. Provide a signed affidavit from the Certified Installer, Certified Professional Evaluator or registered Professional Engineer and any additional required documentation that the system was installed in compliance with all requirements, regulations and permit conditions applicable to the system installed. The Affidavit must be given to the Applicant of the Notice of Intent.

8. Notify the Division within 10 working days of any change in address, business partnership or affiliation, or any other status that affects his/her standing as a Certified Installer. Such notice must be in writing or fax and must be delivered to the Division as soon as practicable after the effective date of the change.

9. Pay the require re-inspection fee.

10. Comply with *National Sanitation Foundation/American National Standard Institute Standard 40* specifically Sections 6.1, and Annex A as an authorized representative.

SOURCE: Miss Code Ann § 41-67-3

Rule 2.1.31 Certified Installer Training Program and Examination

1. Those persons taking written examination specified in Section **41-67-25(3)(b)** shall pay a fee for such testing as determined by the Department based on the actual costs of preparing and administering the examinations.

2. Attendance of the Department’s 2 day Certified Installers training course.

3. Applicant must achieve a score of 80% or better on the closed book examination.

4. All persons completing the above items will be granted a probationary certificate. The probationary certificate will be valid for 1 year. A person will be probationary until he/she installs 3 Individual On-site Wastewater Disposal Systems as indicated from a Permit/Recommendation and work has been inspected by the Division during installation with no deficiencies indicated on Inspection (Form 305). Probationary status will remain in effect until person is deemed competent by the Division.

SOURCE: Miss Code Ann § 41-67-3

Rule 2.1.32 **Certified Installer Expiration**: Certified Installers certifications shall expire **June 30** unless suspended or revoked.

SOURCE: Miss Code Ann § 41-67-3

Rule 2.1.33 **Certified Installer Renewal:**

1. A Certified Installer may apply for renewal not more than 60 calendar days prior to the expiration of his Certified Installer certification. **Note:** If more than 31 calendar day have elapsed from the expiration of the most recent certification, the Department shall require an Applicant to comply with the provisions of initial certification.

2. Any person applying for renewal shall file with the Division:

   a. Completed application;

   b. Proof of CEU(s) credit;

   c. Proof of General Business Liability Insurance Policy;

   d. Fee.

SOURCE: Miss Code Ann § 41-67-3

Rule 2.1.34 **Informal Fact Finding and Hearing**: Whenever the Department intends to take action to suspend or revoke a certification, there must be an informal fact finding conference and proper notice must be given to the affected party.

1. The Certified Installer shall be notified in writing. The notice must be hand delivered or sent by certified mail. The notice must provide the factual and legal basis for the contemplated action and must give the date, time, place, and location of the informal fact finding conference.

2. The informal fact finding conference is to be conducted by an employee of the Department. The conference shall be conducted in accordance with, but is not

limited to, the requirements of *Administrative Procedural Code of Mississippi* and may include the creation of a verbatim or summary record of the proceedings.

3. The Department shall render a decision from the informal fact finding conference in a timely manner. Such decisions shall constitute the final administrative decision and may be appealed.

4. When action is taken to suspend an Installer certification, that suspension shall be for a specified period of time. Remedial actions including, but not limited to, additional training courses, additional testing, and installing or repairing of the Individual On-Site Wastewater Disposal System as conditions of any suspension.

SOURCE: Miss Code Ann § 41-67-3

Rule 2.1.35 **Penalties**

1. The Department may suspend or revoke certification for failure to comply with any law administered by the Board, Department, or any regulation of the Board, any order of the Board or Department after due notice from the Department.

2. Actions that may result in suspension or revocation include, but are not limited to, constructing, installing, repairing, replacing or causing the construction, installation, repairing, replacing of an Individual On-Site Wastewater Disposal System on a site that does not comply with the minimum requirements of the Regulations, falsifying any document, and any act of misrepresentation.

3. If any person is operating in the state as an installer without certification by the Board, the Board, after due notice and opportunity for a hearing, may impose a monetary penalty not to exceed Ten Thousand Dollars ($10,000.00) for each violation.

4. If any person or contractor fails to comply with all requirements and regulations in the installation of the system, the Board, after due notice and hearing, may levy an administrative fine not to exceed Ten Thousand Dollars ($10,000.00). Each wastewater system installed not in compliance with this chapter or applicable rules and regulations of the Board shall be considered a separate offense.

SOURCE: Miss Code Ann § 41-67-3

Rule 2.1.36 **Reinstatement:** Any person whose certification has been revoked may apply to the Division for reinstatement no sooner than 2 years after the effective date of the revocation. Reinstatement of a Certified Installer's certification shall include:

1. An application, fee and a written statement (if applicable) that no activities took place after certification was revoked.

2. Provide documentation that the Applicant has satisfactorily completed any remedial actions required as a result of the revocation. Remedial actions

including, but not limited to, additional training courses, additional testing, and installation or repairing of the Individual On-Site Wastewater Disposal System may be specified as conditions for reinstatement.

SOURCE: Miss Code Ann § 41-67-3

Rule 2.1.37 **Certified Pumper:** A person may not be engaged in the business of removing and disposing of the sludge and liquid waste (septage) from Individual On-site Wastewater Disposal Systems in this state unless that person has a valid license issued by the Department.
Licensing a person constitutes the issuance of a certification with all rights and privileges to clean, pump and dispose of any sludge and liquid waste (septage) from any Individual On-Site Wastewater Disposal Systems, Portable Toilet (Self-Contained), grease trap and/or holding tank.

SOURCE: Miss Code Ann § 41-67-3

Rule 2.1.38 **Certified Pumper Requirements:**

1. The Department shall issue a license to a pumper if the pumper:

2. Completes an application that complies with this chapter and rules adopted under this chapter;

3. Satisfactorily complies with the requirements of his/her pumping and hauling equipment;

4. Provides documentation of a disposal site approved by the Department of Environmental Quality, Office of Pollution Control;

5. Provides proof of having a valid General Business Liability Insurance policy in effect with liability limits of at least Fifty Thousand Dollars ($50,000.00) per occurrence and at least One Hundred Thousand Dollars ($100,000.00) in total aggregate amount;

6. Submits passing inspection of each vehicle;

7. Pays the annual license fee.

SOURCE: Miss Code Ann § 41-67-3

Rule 2.1.39 **Certified Pumper Application:**

1. A person may apply for certification by filing a complete application provided by the Division, attending and satisfactorily completing training program, providing proof of General Business Liability Insurance, submittal of vehicle inspection from the County Health Department and paying the inspection and application fees as specified in Section **43-3-15(4)(e)**. In addition, all Applicants shall list

each approved disposal facility they intend to use. Written verification of permission to use each disposal facility shall accompany the application.

2. Prior to receipt of a certification, the Applicant shall complete an examination demonstrating his knowledge and comprehension of the Individual On-site Wastewater Disposal System Regulations. Within 30 days of passing the examination, the Certified Installer must submit Insurance and fee.

3. Certificates issued in accordance with this regulation shall not be transferable. Nothing within this regulation shall be construed to limit the power of any municipal, county, or governmental entity to enforce other license requirements or additional measures for the restrictions of persons in the business of removing and disposing of sludge and liquid waste from Individual On-Site Wastewater Disposal System(s).

SOURCE: Miss Code Ann § 41-67-3

Rule 2.1.40 **Certified Pumper Inspection: (County Health Department)**

1. Complete Inspection form and return to Division.

2. Verify that all jobs are being recorded on the Data Log sheet.

SOURCE: Miss Code Ann § 41-67-3

Rule 2.1.41 **Certified Pumper Responsibilities:**

1. Notifying the Department within 10 working days of adding, replacing or deleting the inventory of vehicles for the purpose of updating application of any change in address, business partnership or affiliation, or any other status that affects his/her standing as a Certified Pumper.

2. Keep a record on all systems cleaned, pumped and disposed of by address, type of treatment unit, amount pumped, and receipt of disposal at waste treatment facility permitted by the Mississippi Department of Environmental Quality (MDEQ). The proper cleaning of any septic tank or similar unit shall include the substantial removal of its contents.

   a. Discharge of septage or other liquid waste shall be allowed only at those specific locations designated by the owners/operators of approved disposal facilities.

   b. Discharge of septage or other liquid waste into a public sewage collection system, without the consent and permission of the owner/operator of such system, is prohibited.

   c. Records shall be made available at time of the inspection by the Department. Records must be retained for a minimum of 2 years.

d. Provide authorization letter, from a Mississippi Department of Environmental Quality (MDEQ) permitted facility upon inspection and/or request.

3. Deliver vehicle(s) to the appropriate county health office for inspection purposes. This will require the Certified Pumper to contact the county health office.

4. Keep available 5 dry gallons of Lime, ensuring spillage, pumping and transporting of septage or other liquid waste shall be delivered in a manner that is safe and does not create a nuisance or public health hazard.

5. Label the carrier tank "SEPTAGE AND LIQUID WASTE ONLY" at or near the inlet and outlet valve. The use of the carrier tank for other purposes is prohibited. The required lettering shall be a minimum of 2 inches in height.

6. Label vehicle with Name of the Company, address and certification number. The required lettering shall be a minimum of 2 inches in height.

7. Supervise employees and ensure that all systems for which the licensee is responsible shall be pumped and cleaned in accordance with Regulation and other applicable regulations, permits, and standards issued by the Department.

8. Training Program and Examination

   a. A person taking written examinations shall pay a fee as specified in Section **43-3-15(4)(e)** for such testing as determined by the Department based on the actual costs of preparing and administering the examinations.

   b. A person taking a Department-sponsored training course or courses as specified shall pay the fee as specified in Section **43-3-15(4)(e)** for such course as determined by the Department. Fees for such course or courses will be based on the Department's actual expenses in preparing course materials and conducting the training. This section is not intended to prevent or discourage training courses recognized by the Department and offered by entities other than the Department. In the case of training that is not directly sponsored by the Department, Applicants will pay appropriate fees to the sponsoring entity.

   c. Attendance of the Department's 1 day Certified Pumper Training Course.

   d. Applicant must achieve a score of 80% or better on the closed book examination.

   e. A person making application shall provide documentation that he has earned 4 continuing education units (CEUs) in a calendar year. For the purposes of this chapter, a CEU shall be equivalent to contact hours of instruction in subject matter and from sources prior approved by the

Division. Each Certified Pumper shall be responsible for maintaining appropriate records and providing proof of credit earned.

SOURCE: Miss Code Ann § 41-67-3

Rule 2.1.42 **Certified Pumper Expiration**: Certified Pumper certifications shall expire **September 30** unless revoked or suspended.

SOURCE: Miss Code Ann § 41-67-3

Rule 2.1.43 Renewal: A Certified Pumper may apply for renewal not more than 60 calendar days prior to the expiration of his Certified Pumper certification. **Note:** If more than 31 calendar day have elapsed from the expiration of the most recent certification, the Department shall require an Applicant to comply with the provisions of initial certification. Any person applying for renewal shall file with the Division:

1. Completed application;
2. Copy of Inspection from County Health Department;
3. Proof of CEU(s) credit;
4. Proof of General Business Liability Insurance Policy;
5. Copy of letter from disposal site(s); and
6. Fee.

SOURCE: Miss Code Ann § 41-67-3

Rule 2.1.44 **Informal Fact Finding and Hearing**: Whenever the Department intends to take action to suspend or revoke a Pumper certification, there must be an informal fact finding conference in accordance and proper notice must be given to the affected party.

1. The Certified Pumper shall be notified in writing. The notice must be hand delivered or sent by certified mail. The notice must provide the factual and legal basis for the contemplated action and must give the date, time, place, and location of the informal fact finding conference.
2. The informal fact finding conference is to be conducted by an employee of the Department. The conference shall be conducted in accordance with, but is not limited to, the requirements of *Administrative Procedural Code of Mississippi* and may include the creation of a verbatim or summary record of the proceedings.

3. The Department shall render a decision from the informal fact finding conference in a timely manner. Such decisions shall constitute the final administrative decision and may be appealed.

4. When action is taken to suspend a Pumper certification, that suspension shall be for a specified period of time. Remedial actions including, but not limited to, additional training courses, additional testing, and certification by manufacture of pumping equipment.

SOURCE: Miss Code Ann § 41-67-3

Rule 2.1.45 **Penalties:**

1. The Department may suspend or revoke certification for failure to comply with any law administered by the Board, Department, or any regulation of the Board, any order of the Board or Department after due notice from the Department.

2. Actions that may result in suspension or revocation include, constructing, installing, repairing, replacing or causing the construction, installation, repairing, replacing of an Individual On-Site Wastewater Disposal System on a site that does not comply with the minimum requirements of the Mississippi State Department of Health Regulations, spillage, septage or other liquid waste from equipment, dumping or disposing of septage or other liquid waste in a unpermitted or unapproved site, falsifying any document, and any act of misrepresentation made related to Certified Pumper activities.

3. If any person operates in the state as a licensed pumper without a license by the Board, the Board, after due notice and opportunity for a hearing, may impose a monetary penalty not to exceed Ten Thousand Dollars ($10,000.00) for each violation.

4. If any person or contractor fails to comply with all requirements and regulations in the installation of the system, the Board, after due notice and hearing, may levy an administrative fine not to exceed Ten Thousand Dollars ($10,000.00). Each wastewater system installed not in compliance with this chapter or applicable rules and regulations of the Board shall be considered a separate offense. Section **41-67-6(6)**

SOURCE: Miss Code Ann § 41-67-3

Rule 2.1.46 **Reinstatement:** Any person whose Certified Pumper's certification has been revoked may apply to the Department for reinstatement as a Pumper no sooner than 2 years after the effective date of the revocation. Reinstatement of a Certified Pumper's certification shall include:

1. An application, fee and a written statement (if applicable) that no activities took place after certification was revoked.

2. Provide documentation that the Applicant has satisfactorily completed any remedial actions required as a result of the revocation. Remedial actions including, but not limited to, additional training courses, additional testing, and certification by manufacturer of pumping equipment.

SOURCE: Miss Code Ann § 41-67-3

Rule 2.1.47 **Certified Maintenance Provider:** A Certified Maintenance Provider can perform maintenance on an Individual On-Site Wastewater Disposal System which he/she has under contract. This will include the repair or replacement of a component originally installed by a Certified Installer. This shall exclude any repairs or replacement of the disposal system that would require the person to be a Certified Installer. A person may not operate as a maintenance provider in this state unless that person is a maintenance provider certified by the department on April 26, 2011, or is a Certified Installer.

SOURCE: Miss Code Ann § 41-67-3

Rule 2.1.48 Certified Maintenance Provider Responsibilities

1. Provide on all Advanced Treatment System, an affidavit from the property owner agreeing to a continuing maintenance agreement on the installed system at the end of the required manufacturer's maintenance agreement.

2. Providing the property owner with a continuing maintenance agreement on all Advanced Treatment Systems in perpetuity.

3. Furnish proof of certification to an individual before entering a contract with that individual for the continuing maintenance of an individual on-site wastewater disposal system.

4. Provide 2 inspections annually to the homeowner. Each must include the homeowner name/address, date, time and list of components repaired or replaced. This report must be submitted to the Division on a yearly basis.

5. Provide a sample contract and/or list of services to the Division, when requested.

6. Submittal Reports

    a. Inspecting and evaluating Individual On-Site Wastewater Disposal Systems to determine if they are compliant with state law and being properly maintained.

    b. Keeping accurate records of systems inspected and repaired.

    c. Issuing inspection reports to property owners and the Division on a biannual basis from date of contract.

SOURCE: Miss Code Ann § 41-67-3

Rule 2.1.49 **Certified Maintenance Provider Expiration:** Certified Maintenance Provider certifications shall expire on **December 31**, unless suspended or revoked. This certification is valid for 2 years. This is only for the currently certified person, no further certifications will be issued by the Department.

SOURCE: Miss Code Ann § 41-67-3

Rule 2.1.50 **Informal Fact Finding and Hearing:** Whenever the Department intends to take action to suspend or revoke a Maintenance Provider certification, there must be an informal fact finding conference and proper notice must be given to the affected party.

1. The Certified Maintenance Provider shall be notified in writing. The notice must be hand delivered or sent by certified mail. The notice must provide the factual and legal basis for the contemplated action and must give the date, time, place, and location of the informal fact finding conference.

2. The informal fact finding conference is to be conducted by an employee of the Department. The conference shall be conducted in accordance with, but is not limited to, the requirements of *Administrative Procedural Code of Mississippi* and may include the creation of a verbatim or summary record of the proceedings.

3. The Department shall render a decision from the informal fact finding conference in a timely manner. Such decisions shall constitute the final administrative decision and may be appealed.

4. When action is taken to suspend a Maintenance Provider certification, that suspension shall be for a specified period of time. Remedial actions including, but not limited to, additional training courses, examination, and installation or repairing of the Individual On-Site Wastewater Disposal System(s).

5. Submitting false information to the property owner or to the Department is grounds for certification revocation.

6. Falsifying inspection reports is grounds for certification revocation.

7. Violating Mississippi State Laws or Regulations Governing On-site Wastewater Disposal Systems, or encouraging property owners to violate said laws and regulations, is grounds for certification revocation.

SOURCE: Miss Code Ann § 41-67-3

Rule 2.1.51 **Penalties:**

1. The Department may suspend or revoke certification for failure to comply with any law administered by the Board, Department, or any regulation of the Board,

any order of the Board or Department after due notice from the Department.

2. Actions that may result in suspension or revocation include, but are not limited to, repairing, replacing or causing the repairing, replacing of an Individual On-Site Wastewater Disposal System that does not comply with the minimum requirements of the Mississippi State Department of Health Regulations, falsifying any document, and any act of misrepresentation made related to Certified Maintenance Provider activities.

SOURCE: Miss Code Ann § 41-67-3

Rule 2.1.52 **QUALIFIED HOMEOWNER MAINTENANCE PROVIDER:** A Qualified Homeowner Maintenance Provider can repair or replace any component on an installed Individual On-Site Wastewater Disposal System at his/her primary residence which utilizes an Advanced Treatment System. This will include the repair or replacement of any component used as primary treatment or disposal.

SOURCE: Miss Code Ann § 41-67-3

Rule 2.1.53 A person shall not operate as a Qualified Homeowner Maintenance Provider on any Individual On-Site Wastewater Disposal Systems unless that person is trained by a Certified Installer authorized by the specific Manufacturer of the homeowner's Advanced Treatment System with documentation from the Manufacturer being provided to the Department.

SOURCE: Miss Code Ann § 41-67-3

Rule 2.1.54 Qualified Homeowner Maintenance Provider Responsibilities

1. Provide continuous maintenance on his/her Advanced Treatment System in perpetuity.

2. Successfully complete manufacturer's training and certification whose Advanced Treatment Systems are certified for sale in Mississippi shall be allowed by the Department to perform on-site wastewater maintenance on that manufacturer's Advanced Treatment System.

3. Provide 1 inspection based on date of installation. Each must include the homeowner name/address, date, time and list of any components repaired or replaced and present the report every 2 years to the Division with certification renewal.

4. Submittal Reports

   a. Inspect and evaluate his/her on-site systems.

   b. Keeping accurate records of systems inspected and repaired.

c. Issuing inspection reports to the Division on an annual basis.

SOURCE: Miss Code Ann § 41-67-3

Rule 2.1.55 **Informal Fact Finding and Hearing:**

1. Whenever the Department intends to take action to suspend or revoke a Qualified Homeowner Maintenance Provider certification, there must be an informal fact finding conference and proper notice must be given to the affected party.

   a. The Qualified Homeowner Maintenance Provider shall be notified in writing. The notice must be hand delivered or sent by certified mail. The notice must provide the factual and legal basis for the contemplated action and must give the date, time, place, and location of the informal fact finding conference.

   b. The informal fact finding conference is to be conducted by an employee of the Department. The conference shall be conducted in accordance with, but is not limited to, the requirements of *Administrative Procedural Code of Mississippi* and may include the creation of a verbatim or summary record of the proceedings.

   c. The Department designee shall render a decision from the informal fact finding conference in a timely manner. Such decisions shall constitute the final administrative decision and may be appealed.

   d. When action is taken to suspend a Qualified Homeowner Maintenance Provider certification, that suspension shall be for a specified period of time. Remedial actions including, but not limited to, additional training courses, examination, and installation or repairing of the Individual On-Site Wastewater Disposal System(s).

SOURCE: Miss Code Ann § 41-67-3

Rule 2.1.56 **Penalties:**

1. The Department may suspend or revoke certification for failure to comply with any law administered by the Board, Department, or any regulation of the Board, any order of the Board or Department after due notice from the Department.

2. Actions that may result in suspension or revocation include, but are not limited to, repairing, replacing or causing the repairing, replacing of an Individual On-Site Wastewater Disposal System that does not comply with the minimum requirements of the Mississippi State Department of Health Regulations, certifying any Individual On-Site Wastewater Disposal System that proof of ownership is not filed with the Division, transferring of ownership without notifying Division, falsifying any document, and any act of misrepresentation made related to Qualified Homeowner Maintenance Provider activities.

SOURCE: Miss Code Ann § 41-67-3

Rule 2.1.57 **Hearing Procedure:**

1. Prior to assessing and collecting the administrative fine, the Department shall provide written notification by Certified Mail/Return Receipt Requested to the violator, stating the basis for the fine, and setting an administrative hearing date within 10 working days of mailing of such notification.

2. Upon determination of the first hearing if sufficient reason for the fine to be assessed, the installer shall have 10 working days from receipt of such determination to request an additional hearing at the second level, if he wishes to appeal the decision of the hearing officer.

3. At the second level, a hearing officer appointed by the State Health Officer shall conduct a hearing to be scheduled within 30 calendar days of receipt of the request for such hearing.

4. The second level hearing shall be held at the Mississippi State Department of Health, 570 E Woodrow Wilson, Jackson, Mississippi. The appellant will be provided procedural rules.

5. The decision to be made by the State Health Officer or appointee will be based solely on the oral, written and documentary evidence presented. After considering all findings of fact, conclusions of law and recommendations of the hearing officer, the State Health Officer will make the final decision whether to sustain the decision made by the first level hearing official and assess and collect the fine. The decision of the State Health Officer will be binding on the Department. The appellant will be notified in writing by certified mail of the State Health Officer's decision.

6. In case of an adverse decision the appellant will be advised of the right to pursue judicial review.

7. No individual may file a petition for judicial review with a court of competent jurisdiction until a final written decision and order have been provided by the Mississippi State Department of Health.

8. A certification may be summarily suspended by the issuing official pending a hearing, as herein provided, if the holder of the certification acts in such a manner as to pose an immediate or serious threat to the public health. In the case of a summary suspension, the certified installer shall be given a hearing as soon as possible after the issuing official receives a written request for a hearing.

SOURCE: Miss Code Ann § 41-67-3

Chapter 3. Commercial Development

Subchapter 1. Subdivision

Rule 3.1.1. **PURPOSE:** The purpose of this regulation is to establish procedures and protocols for the review and subsequent approval, referral or disapproval of proposed subdivisions planning to utilize individual onsite wastewater disposal systems.

SOURCE: Miss Code Ann § 41-67-3

Rule 3.1.2. **AUTHORITY:** The State Board of Health is authorized to promulgate these rules under and by virtue of Section 41-3-15 (4) (a) (b) (f) and Section 41-67-1 through 41-67-29 Mississippi Code of 1972, Annotated.

SOURCE: Miss Code Ann § 41-67-3

Rule 3.1.3. **DEFINITIONS**

1. Available space - sufficient area in which to properly install the required individual onsite wastewater disposal system including the working area necessary to prevent excessive and unnecessary equipment traffic over the system and space allowance for future extensions.

2. Bedroom - a room designed primarily for sleeping or a room which is expected to routinely provide sleeping accommodations for occupants.

3. Board - the Mississippi State Board of Health.

4. Covenant Running with the Land - a covenant which goes with the land and which cannot be separated from the land and transferred without it. This covenant is said to run with the land when not only the original parties or their representatives, but each successive owner of the land, will be entitled to its benefits, or be liable to its obligation.

5. Department - the Mississippi State Department of Health.

6. Developer - a person who creates a subdivision development, multi-family dwelling, manufactured home development, commercial establishment or recreational vehicle park as herein defined.

7. Division – the Mississippi State Department of Health, Division of On-Site Wastewater.

8. Dwelling - a house, manufactured home, shelter, structure, or building, or portion thereof, which is not readily mobile and is occupied in whole or in part as the home, residence, or sleeping place of one or more people.

9. Feasibility study - a report composed by a Professional Engineer comparing the most cost effective central sewage collection system to the appropriate individual onsite wastewater disposal system as regulated by the Mississippi Department of Health.

10. Establishment – a multi-family housing apartment, condominium or townhouse complex, a manufactured home park or recreational vehicle park, a non-residential commercial or institutional development or places of business or assembly. An establishment includes all buildings or structures, and the land appertaining thereto and shall have a legal entity which is responsible for ownership and maintenance/operation of the sewage treatment and disposal facilities.

11. Flooding - a covering of the soil surface by water from any source, such as streams overflowing their banks, runoff from adjacent or surrounding slopes, elevation of the ground water table exceeding that of the soil surface, or combinations of these. Terms also associated with flooding and used elsewhere in this Chapter are:

    a. Frequent - flooding is likely to occur often under usual weather conditions (more than a 50 percent chance of flooding in a year, or more than 50 times in 100 years).

12. Impaired Water Bodies - water bodies identified as impaired due to pathogens, organic enrichment/low DO, biological impairment and fecal coliform in Sections A and C of the most recent approved TMDL 303d listing as published by the Mississippi Department of Environmental Quality.

13. Individual On-Site Wastewater Disposal System - a sewage treatment and effluent disposal system that does not discharge into waters of the state, that serves only 1 legal tract, that accepts only human sanitary waste and other similar waste streams maintained on the property of the generator, and that is designed and installed in accordance with law and regulations of the board.

14. Manufactured Home Development – shall mean any parcel or tract of land under the control of a person wherein sites are offered for the use of the public for the establishment of living sites for two or more manufactured homes.

15. Multiple Family Dwelling – a dwelling where occupying individual are not related to within the third degree of kinship based on *Miss Code*.

16. Person - any individual, trust, firm, joint-stock company, public or private corporation (including a government corporation), partnership, association, state, or any agency or institution thereof, municipality, commission, political subdivision of a state or any interstate body, and includes any officer or governing or managing body of any municipality, political subdivision, or the United States or any officer or employee thereof.

17. Plat - a property depiction (map/drawing), prepared by a professional land surveyor/professional engineer in accordance with the rules and regulations governing the profession, drawn to a scale adequate to provide information in a clear and legible manner, be suitable for recording and showing the location and boundaries of the parcel and of all lots if subdivided and including details as specified by these regulations. Any detail specified by these regulations for a surveyed plat must be depicted exactly per the survey and shall not be hand drawn in as may be done on a plot plan.

18. Professional Engineer - a person that has met the qualifications as required under Section 73-13-23(1), *Miss Code* of 1972, Annotated and who has been issued a certificate of registration as a professional engineer.

19. Recreational Vehicle – shall mean a vehicular-type unit designed as living quarters for recreational, camping, or travel use, which either has its own motive power or is mounted on or towed by another vehicle. The basic entities include, but not limited to a travel trailer, camping trailer, truck camper, van or motor home.

20. Recreational Vehicle Campground - shall mean any parcel or tract of land under the control of any person, organization, or governmental entity wherein sites are offered for the use of the public or members of an organization for the establishment of living sites for two or more recreational vehicles.

21. Wastewater - means human body waste and wastewater, including bath and toilet waste, residential laundry waste, residential kitchen waste, and other similar waste from appurtenances at a residence or establishment.

    a. Domestic sewage waste ranges:

        i. Carbonaceous Biochemical Oxygen Demand (CBOD5), maximum 300 mg/l

        ii. Total Suspended Solids (TSS), maximum 200 mg/l

        iii. pH, 6 - 8; or within 1 pH unit of the water supply pH

        iv. Nitrogen (Total Kjeldahl Nitrogen, TKN) maximum 100 mg/l

22. Sensitive Waters - private waters used for recreation (swimming, skiing, fishing), or other situations where people are likely to come into contact with the water and state waters classified as shellfish harvesting, public water supply, ephemeral or recreational in the Mississippi Commission on Environmental Quality Regulation WPC-2, Water Quality Criteria for Intrastate, Interstate and Costal Waters.

23. Site Plan - see Plat

24. Subdivision - any land that is divided into 10 or more lots, tracts, sites or parcels for the purpose of residential development.

25. Water Storage Easement - an entitlement in perpetuity allowing the holder of the easement to impound water in a reservoir, and inundate land up to a specified contour elevation above mean sea level.

SOURCE: Miss Code Ann § 41-67-3

Rule 3.1.4. **General Provisions**: It is the policy of the Board that connection to a public sewer system is recommended when a proposed development has access to such existing sewer system. It is the policy of the Board that connection to a public water system is recommended when a proposed development has access to such public water system.

SOURCE: Miss Code Ann § 41-67-3

Rule 3.1.5. Subdivision Approval Required: No person shall commence any act which would constitute building a development on 10 or more lots for residential use utilizing on-site sewage disposal systems prior to submitting the Subdivision Application, from the Department. Nothing in this Chapter shall be construed to prevent the department from conducting soil borings, any other preliminary testing and/or inspection.

SOURCE: Miss Code Ann § 41-67-3

Rule 3.1.6. **Subdivision Review Required**:

1. Any person proposing to develop a subdivision, or an addition to a subdivision utilizing on-site wastewater disposal shall submit, to the Department, information for review outlined on the Subdivision Review Checklist Form, provided by the Department.

2. For purposes of these regulations, the subdividing of property into 10 or more lots, tracts, sites or parcels for the purpose of residential or commercial development shall constitute development of a subdivision.

3. Once all of the required information is submitted, the development will be evaluated following the flow chart found 2.35 Procedures, Chart I of this regulation.

4. The following activities shall not be considered as creating a subdivision:

    a. Dividing a parcel of land for the purpose of a bona fide gift.

b. Dividing a parcel of land under the provisions of a will or under the laws of intestate succession.

c. The mere sale, lease or rental of land, provided that the sale, lease or rental does not take place in conjunction with building development.

SOURCE: Miss Code Ann § 41-67-3

Rule 3.1.7. **Responsibilities:**

1. The Mississippi State Department of Health shall be responsible for the following:

   a. Evaluating the site for proposed subdivision development, commercial establishment, multi-family dwelling, manufactured home development or recreational vehicle park for the placement and use of Individual On-site Wastewater Disposal Systems. The evaluation will be based on soil/site conditions and the amount of available area to place these systems. The property must be evaluated by staff from the Division of On-site Wastewater.

2. If the property is to be subdivided, have a multi-family residence, a commercial establishment, a manufactured home development or recreational vehicle campground, the property owner shall be responsible for the following:

   a. Furnishing a legal description and site plan of the entire area to be developed. The site plan shall show lot lines, lot sizes (dimensions and total area), and existing ground contours on **two foot intervals**. The site plan shall show all lakes, ponds streams, and any known or possible wetland areas. Names of the adjacent property owners and their property lines abutting the proposed development shall be shown. If the developer has title to or has a vested interest in property adjoining his/her proposed development the developer must indicate the property on the plat and provide a letter of intention concerning this property. In addition to the above requirements developers of Multi-Family residences, Manufactured Home Developments or Recreational Vehicle Campgrounds must also submit information regarding the placement of residences, manufactured homes, or recreational vehicles on the site plan. Developers of recreational vehicle campgrounds must also indicate the location and size of RV dump stations and bath houses.

   b. Submitting the feasibility study to the Mississippi State Department of Health, Division of On-site Wastewater, whenever 35 or more lots are involved. This study must be completed before any lot is approved. When residential subdivision are proposed which are composed of fewer

than 35 lots, but more than 10 lots, and no system of sanitary sewer is available to which collection sewers may be feasibly connected, the State Health Officer may waive the requirement for a feasibility study. Such waiver of the feasibility study will not be granted if the proposed development meets any one of the following criteria:

i. Is within a wastewater utility district where that utility has certified it will provide service

ii. Is within a regional wastewater authority that has certified it will provide service

iii. Is within one mile of a city with sewer availability that has certified it will provide it will provide sewer service

iv. MSDH analysis reflects that soil and site conditions may not be conducive for Individual On-site Wastewater Disposal Systems.

c. No Feasibility Study or community sewage system shall be required for subdivisions designed, laid out, platted or partially constructed before **July 1, 1988** or subdivisions platted and recorded between **July 1, 1995** and **June 30, 1996**.

SOURCE: Miss Code Ann § 41-67-3

Rule 3.1.8. Subdivisions Requiring a Feasibility Study

1. The developer shall employ a Professional Engineer to prepare the feasibility study to determine the proper, adequate method of sewage disposal for the proposed subdivision.

2. The Feasibility Study and all accompanying materials shall be prepared and submitted to the Division for review. The complete submittal must contain all original signatures and seals and include an electronic copy of the plat. The Feasibility Study should be submitted well in advance of the anticipated construction date, since a lack of necessary information could cause additional delays.

   a. If all required information is not provided with the submittal, the applicant shall be notified in writing and review withheld until the complete information is received.

3. The feasibility study shall be accompanied by the following attachments:

   a. A vicinity map

   b. A subdivision plat showing:

i. The name of the subdivision

ii. A layout drawn to scale of proposed lots, streets and easements which shows the location of existing and proposed wells. The scale of the plats shall be adequate to provide information in a clear and legible manner.

iii. Actual lot sizes and lot sizes excluding easements, rights of way and other similar areas. Easements and rights of way must be identified as to their purpose, i.e., electrical, water, etc..

iv. Phases, sectors, block and lot numbers, and street names or identification

v. A minimum of one corner of the proposed development identified in State Plane Coordinates or longitude and latitude.

vi. Topography of the area, with contour on **two foot intervals** to show existing and proposed drainage, existing grades, and finished grades where changes are anticipated.

vii. An adequate plan showing frequently flooded areas, existing and proposed drainage, and easements for surface and subsurface drainage. Normal and flood elevations of lakes shall be clearly and accurately shown.

viii. All soil borings performed in the subdivision, located accurately and properly identified.

ix. When a subdivision includes land within a water storage easement or flood easement, a letter shall be required from the easement holder, addressing the proposed development's compliance with any rules or guidelines of the easement holder.

4. After the feasibility study has been submitted and reviewed, a final report shall be completed by the Division of On-site Wastewater indicating the determination of feasibility of on-site systems or central collection and treatment. The final report shall be returned to the applicant or his/her agent with written notice of actions taken.

SOURCE: Miss Code Ann § 41-67-3

Rule 3.1.9. Subdivisions in Wetlands or Frequently Flooded Areas: All subdivisions to be developed utilizing onsite sewage disposal systems wholly or partially within a wetland or a frequently flooded area as defined in this regulation shall, in addition to the other requirements of this regulation, comply with the following requirements:

1. No approval shall be given for any Subdivision which lies wholly within a wetland or a frequently flooded area.

2. Where a proposed Subdivision is located partially within a wetland or a frequently flooded area, that portion of the Subdivision not within the wetland or frequently flooded area may be considered for approval.

SOURCE: Miss Code Ann § 41-67-3

Rule 3.1.10. **Procedures and Protocol**

1. Once all required information is submitted, the Division of On-site Wastewater shall complete the review of the development or request additional information within thirty calendar days.

2. The review of the proposed project for determination of the requirement for a feasibility study will be made utilizing the steps outlined in a flow chart.

3. Subdivisions will be considered feasible for central collection, if the cost of a central system does not exceed 150 percent of the aggregate cost of an individual on-site wastewater disposal system on each lot.

SOURCE: Miss Code Ann § 41-67-3

Rule 3.1.11. On-site Systems Serving Commercial Establishments, Multi-Family Residences, Manufactured Home Developments and Recreational Vehicle Campgrounds

1. A property owner planning to build, construct or otherwise place more than two families, manufactured homes or recreational vehicles or a single commercial establishment on a single tract of land and is planning to utilize an Individual On-site Wastewater Disposal System, designed to treat and dispose of residential strength wastewater, must submit information on the Multi-Family Residence and Manufactured Home Development/Recreational Vehicle Campground Checklist Form provided by the Department.

2. Multi-Family residences must count each separate unit as one “lot” in the development.

3. The planned sewage flow for each lot in a manufactured home development shall be 450 gallons per day.

4. More than one commercial establishment, recreational vehicle or multi-family dwelling may be connected to a single on-site wastewater disposal system, provided that one person is accountable for the on-site sewage disposal system in accordance with these regulations for all dwellings involved.

5. Commercial establishments, multi-family dwellings and recreational vehicle campgrounds where the connection of more than one dwelling to an on-site

sewage disposal system is proposed, the application to install an on-site disposal system shall include the information in 2.33 (2) and the following additional information:

a. A complete layout of streets, parking areas, on-site sewage disposal systems, sewer lines, water lines, easements, underground utilities and dwelling locations;

b. Total acreage or square footage of the proposed property.

c. A notarized statement signed by the property owner, stating that the property will not be subdivided or lots sold, and that the on-site sewage disposal system will be under the responsibility of one person, and giving the name of that person, with address and telephone number.

d. For multi-family dwellings, each building plan shall show the number of dwelling units and number of bedrooms.

6. Projects with projected wastewater flows in excess of fifteen hundred (1,500) gallons per day and flows of high strength waste (not typical of domestic sewage waste) must be designed and submitted by an engineer.

7. The property involved shall not be developed in excess of its capacity to properly treat and dispose of sewage flows generated by the project.

8. The property owner of commercial establishments, recreational vehicle campgrounds or multi-family dwellings where multiple units are connected to a single onsite system shall establish covenants running with the land which shall include, at a minimum the following:

a. The responsible person originally owning or developing the property shall own and be responsible for the operation and maintenance of the common sewage disposal system(s). The responsible party shall not disestablish itself without the concurrence of the Department, in which case its responsibilities shall pass to its successors or assigns.

b. The covenants shall binding on present and future owners until such time as the system(s) is/are no longer required by the Regulation, the same being the case when each space (lot) is connected to a public or private sanitary sewer system.

9. Once the developer has assembled the required documentation it must be submitted to the department for review. Upon completion of the review the developer or his/her agent will receive authorization to proceed with the project.

SOURCE: Miss Code Ann § 41-67-3

Rule 3.1.12. **Hearing And Appeals:**

1. Any person aggrieved by the Department's determination of feasibility disapproval or requirements for an on-site wastewater disposal system as provided by the department may request a review of the determination. The request for review must be submitted in writing to the Director of the Office of Environmental Health. The request for review shall identify the matter contested and state the name of the development, developer's name, mailing address and home and daytime phone numbers. Within 10 business days of the receipt of the request for review, the Department shall issue in writing a ruling and determination to the person and if any corrections are necessary to any correspondence or form previously issued by the department, then new correspondence or forms shall be submitted to the person.

2. Any person aggrieved by the ruling issued by the Director of the Office of Environmental Health may apply for a hearing. Any hearing shall be conducted by a hearing officer designated by the Department. At the hearing, the hearing officer and any person affected by the proposal being reviewed may conduct reasonable questioning of persons who make relevant factual allegations concerning the proposal. The Hearing Officer shall require that all persons be sworn before they may offer any testimony at the hearing, and the hearing officer is authorized to administer oaths. Any person so choosing may be represented by counsel at the hearing. A record of the hearing shall be made, which shall consist of a transcript of all testimony received, all documents and other material introduced by any interested person, the staff report and recommendation, and any other material as the hearing officer considers relevant, including his own recommendation. He shall make a recommendation within a reasonable period of time after the hearing is closed and after he has had an opportunity to review, study and analyze the evidence presented during the hearing. The completed record shall be certified to the State Health Officer, who shall consider only the record in making his decision, and shall not consider any evidence or material which is not included. All final decisions regarding the disapproval or requirements for an on-site wastewater disposal system shall be made by the State Health Officer. The State Health Officer shall make his written findings and issue his order after reviewing the record. The findings and decision of the State Health Officer shall not be deferred to any later date, and any deferral shall result in an automatic order of disapproval.

SOURCE: Miss Code Ann § 41-67-3

Subchapter 2. RECREATIONAL VEHICLE CAMPGROUNDS

Rule 3.2.1. **Purpose:** The purpose of this regulation is to establish minimum design/construction standards regarding sanitary facilities, and to establish requirements for persons engaged in the operation of Recreational Vehicle Campgrounds (RV Campgrounds).

SOURCE: Miss Code Ann § 41-67-3

Rule 3.2.2. **Authority:** The State Board of Health is authorized to promulgate these rules under and by virtue of Section 41-3-17 and Section 41-25-13, Mississippi Code of 1972, Annotated.

SOURCE: Miss Code Ann § 41-67-3

Rule 3.2.3. **Definitions:**

1. Department - shall mean the Mississippi State Department of Health.

2. Department of Environmental Quality - shall mean the Mississippi Department of Environmental Quality, Office of Pollution Control.

3. Health Authority - shall mean an authorized representative of the Mississippi State Department of Health.

4. Non Self-Contained Unit - shall mean a recreational vehicle which does not have a flush toilet, bathtub or shower, handwashing compartment, and internal storage compartments of potable water supply and sewage holding.

5. Permit - shall mean a written permit issued by the Agency permitting the campground to operate under this regulation.

6. Person - shall mean any individual, firm, partnership, corporation, company, association, or governmental unit.

7. Recreational Vehicle - shall mean a vehicular-type unit designed as living quarters for recreational, camping, or travel use, which either has its own motive power or is mounted on or towed by another vehicle. The basic entities include, but are not limited to a travel trailer, camping trailer, truck camper, van, and motor home.

8. Recreational Vehicle Campground - shall mean any parcel or tract of land under the control of any person, organization, or governmental entity wherein sites are offered for the use of the public or members of an organization for the establishment of living sites for two or more recreational vehicles.

9. Recreational Vehicle Lodging Park - shall mean a recreational vehicle campground with approved water and sewer connections provided to each living site for the accommodation of “self-contained unit” recreational vehicle parking.

10. Recreational Vehicle Waste Disposal Station - shall mean a properly designed facility used for receiving and disposing of liquid wastes from recreational vehicle holding tanks.

11. Self-Contained Unit - shall mean a recreational vehicle which has a flush toilet, bathtub or shower, handwashing compartment, and internal storage compartments of potable water supply and sewage holding.

12. Sewered - shall mean a living site within a campground that is provided an individual sewer drop (connection) to a central collection and disposal sanitary sewer system.

13. Unsewered - shall mean a living site within a campground that is not provided an individual sewer drop (connection) to a central collection and disposal sanitary sewer system

SOURCE: Miss Code Ann § 41-67-3

Rule 3.2.4. **Permits:**

1. **General Provisions:**

It shall be unlawful for any person to maintain, or operate any recreational vehicle campground within the State of Mississippi unless he/she holds a valid permit issued annually by the Department in the name of such person for the specific campground. All applications for permits shall be made, prior to any construction of the campground, to the applicable county health department which shall issue a permit only after a final inspection of the completed RV campground has indicated all requirements of the regulations are met. No permit shall be transferable from one location to another location or from one person to another person.

Every person holding such a permit shall give notice in writing to the Department within 48 hours after having sold, transferred, given away, or otherwise disposed of interest in or control of any recreational vehicle campground. Such notice shall include the name and address of the person succeeding to the ownership or control of such campground.

2. **Plan Submittal:** A complete plan for the purpose of obtaining a new permit to be issued by the Department shall show:

a. A vicinity map showing the general location of the campground.

b. The area and dimensions of the tract of land.

c. The number, location, and size of all camping sites and their designated usage.

d. The location and width of roadways.

e. The location of all service buildings and other proposed structures.

f. The location, size, slope and other applicable data on water and sewer lines.

3. **Application for Permits:**

a. Application for new permits shall be in triplicate on forms provided by the Department, signed by the applicant, and shall contain the following:

i. The name, address, and telephone number of the applicant.

ii. The interest of the applicant in and the location and legal description of the campground.

iii. A complete plan of the campground, showing compliance with all applicable provisions of this regulation.

iv. Such further information as may be requested by the Department to enable it to determine that the proposed campground will comply with legal requirements.

b. It shall be unlawful for any person to construct a RV campground until the local health authority has approved the application, including the plans/specifications of the proposed campground.

c. Application for renewal of permits shall be made as above by the holder of the permit and shall contain the following:

i. Any change in the information submitted since the time the original permit was issued or the latest renewal granted.

ii. Such other information as the Agency may require.

4. **Permit Hearings:** Any person, whose application for a permit under this regulation has been denied, may request and shall be granted a hearing on the matter before the health authority under the procedure provided by Section 4.6 of this regulation.

5. **Notices:** Whenever, upon inspection of any recreational vehicle campground, the health authority finds that conditions or practices exist which are in violation of any provision of this regulation, the health authority shall give notice in writing in accordance with Item 4.6 (1.) to the owner or agent that, unless such conditions or practices are corrected within a reasonable period of time specified in the notice by the health authority, the permit will be suspended. At the end of such period, the health authority shall reinspect such campground and, if such conditions or practices have not been corrected, shall suspend the permit and give notice in writing of such suspension to the owner or agent. Upon receipt of such notice of suspension, such person shall cease to accept new occupants in such campground.

6. **Permit Suspension:** Any person whose permit has been suspended, or who has received notice from the health authority that his/her permit will be suspended unless certain conditions or practices at the campground are corrected, may request and shall be granted a hearing on the matter before the health authority, under the procedures provided by Section 4.6(2.) of this regulation. If no hearing is requested, the permit shall be automatically revoked 10 days following the day on which notice of suspension was served.

SOURCE: Miss Code Ann § 41-67-3

Rule 3.2.5. Inspection of Campgrounds

1. The health authority shall make inspections to determine the condition of recreational vehicle campgrounds in order that he/she may perform his/her duty of safeguarding the health and safety of occupants of campgrounds and of the general public.

2. Right of Entry: The health authority shall have the power to enter at reasonable times upon any private or public property for the purpose of inspecting and investigating conditions relating to the enforcement of this regulation. It shall be the duty of the owners or occupants of the campgrounds, or of the person in charge thereof, to give the health authority free access to such premises at reasonable times for the purpose of inspection.

SOURCE: Miss Code Ann § 41-67-3

Rule 3.2.6. Notices, Hearings, and Orders

1. **Notices:** Whenever the health authority determines that there are reasonable grounds to believe that there has been a violation of any provision of this regulation, he/she shall give notice of such alleged violation to the owner or agent of the campground, as hereinafter provided. Such notice shall:

   a. Be in writing.

   b. Include a statement of the reasons for its issuance.

   c. Allow a reasonable time for the performance of any act it requires.

   d. Be served upon the owner or his/her agent as the case may require, provided such notice or order shall be deemed to have been properly served upon such owner or agent when a copy of the inspection report form or other notice has been delivered personally to the permit holder or person in charge, or such notice has been sent by registered mail to his/her last known address, or when he/she has been served with such notice by any other method authorized or required by the laws of this state.

e. Contain an outline of remedial action, which, if taken, will effect compliance with the provisions of this regulation.

2. **Hearings:** Any person affected by any notice which has been issued in connection with the enforcement of any provision of this regulation may request and shall be granted a hearing on the matter before the health authority. Such person shall file in the office of the health authority a written petition requesting such hearing and setting forth a brief statement on the grounds therefor. Upon receipt of such petition, the health authority shall set a time and place for such hearing, and the petitioner shall be given an opportunity to be heard and to show why such notice should be modified or withdrawn. The hearing shall be commenced not later than 10 days after the day on which the petition was filed. However, upon application of the petition, the health authority may postpone the date of the hearing for a reasonable time beyond such 10-day period when in his/her judgment the petitioner has submitted good and sufficient reasons for such postponement.

3. **Orders:** After such hearing, the health authority shall make findings as to compliance with the provisions of this regulation and shall issue an order in writing sustaining, modifying, or withdrawing the notice which shall be served as provided in Item 4.6(d). Upon failure to comply with any order sustaining or modifying a notice, the permit of the campground affected by the order shall be revoked. Revoked permits may not be reissued, but a new permit may be issued if all requirements of this regulation are met.

4. **Emergency Situations:** Whenever the health authority finds that an emergency exists which requires immediate action to protect the public health, he/she may, without notice or hearing, issue an order citing the existence of such an emergency and requiring that such action be taken as he/she may deem necessary to meet the emergency, including the suspension of the permit. Notwithstanding any other provisions of this regulation, such order shall be effective immediately. Any person to whom such an order is directed shall comply therewith immediately, but upon petition to the health authority shall be afforded a hearing as provided in Item 4.6(2). The provisions of Items 4.6(3) and 4.6(4) shall be applicable to such hearing and the order issued thereafter.

5. **Notice of Revocation:** When a permit to operate a recreational vehicle campground has been revoked, the health authority shall notify all occupants of the revocation.

SOURCE: Miss Code Ann § 41-67-3

Rule 3.2.7. **Location, Space, and General Layout:**

1. **Location:** The campground shall be located on a well-drained site and shall be reasonably free from marshes, swamps, or other potential breeding places for insects or rodents.

2. **Space Requirements:** Each camping site shall contain a minimum of 1,000 square feet and shall be a minimum of 50 feet in length and a minimum of 20 feet in width. Roadways shall not be included in the calculation of the camp site space requirements. The campground area shall be large enough to satisfactorily accommodate:

   a. The designated number of each type of camping sites proposed.

   b. Necessary streets, roadways, and parking areas.

SOURCE: Miss Code Ann § 41-67-3

Rule 3.2.8. **Water Supply:**

1. **General:**

   a. In all recreational vehicle campgrounds, a pressurized water system, adequate to serve all anticipated needs, shall be provided.

   b. Water supplies shall meet all current requirements of the Department. They shall be properly located, constructed, and protected to exclude surface contamination and to minimize the potential of contamination from sanitary hazards. All portions of the water system located in the campground shall be easily accessible for maintenance. The ownership of all portions of the water system serving the campground shall be made a matter of record to the Department.

2. **Plan Review:**

   a. For all proposed new recreational vehicle campgrounds with 15 or more campsites, the water systems shall comply with the Mississippi State Board of Health Regulation Governing Public Water Systems. Plans and specifications for such water systems must be submitted to and approved by the Bureau of Water Supply, Mississippi State Department of Health prior to the beginning of construction of the campground.

   b. Water systems serving recreational vehicle campgrounds with no more than 14 campsites must meet all of the requirements of the health authority. Plans and specifications for such water systems must be submitted to, and approved by the local county health department.

3. **Public Water Supplies:** If a proposed recreational vehicle campground is to be located in a municipality which has a public water system or in the certificated area of an existing community water system or sanitary district, the campground must be served by the existing public system if, in the opinion of the Department, the existing public system can provide an adequate supply of water.

4. **Construction Procedures**

a. The water system of the campground shall be connected to all comfort stations and service buildings and will include a method of protection against the hazards of backflow and back-siphonage.

b. All water piping shall be constructed and maintained in accordance with state and local codes and regulations. The water piping system shall not be connected with nonpotable or questionable water supplies, and shall be protected against the hazards of backflow or back-siphonage by an approved device or method. All plastic pipe used must bear the NSF (National Sanitation Foundation) seal of approval.

c. Where drinking fountains are provided for public use, they shall be of a type and in locations approved by the health authority.

d. Individual water service connections which are provided for direct use by recreational vehicles shall be so constructed that they will not be damaged by the parking of vehicles. The individual water supply connections shall be so designed and constructed as to prevent backflow or back-siphonage. A minimum of 30 inches of cover shall be maintained over all underground water lines. The campground water system shall be adequate to provide a minimum of 20 pounds per square inch of pressure at all outlets under peak flow conditions.

e. Underground stop-and-waste cocks shall not be installed on any connection.

f. Individual service connections shall be constructed so as to protect the line from contamination by ground water.

5. **Outlets:** Water outlets shall be convenient of access and when not piped to individual campsites, shall not be located farther than 500 feet from any site. Each sewered site must have a water outlet located within 15 feet. Provisions shall be made to prevent accumulations of standing water or the creation of muddy conditions at each water outlet.

6. **Recreational Vehicle Watering Stations**

a. A watering station, if provided, for filling recreational vehicle water tanks shall be located at least 50 feet from a waste disposal station. When such is provided, adjacent to the potable water outlet, there shall be posted a sign of durable material, not less than 2 feet by 2 feet in size, and inscribed thereon in clearly legible letters shall be: **"POTABLE WATER, NOT TO BE USED FOR FLUSHING WASTE TANKS."**

b. The potable water supply station shall be protected from backflow and backsiphonage. by means of an approved device located downstream from the last shutoff valve.

SOURCE: Miss Code Ann § 41-67-3

Rule 3.2.9. **Sewage Disposal:**

1. **General Provisions:** All sewage and other liquid wastes generated within a campground shall be disposed of in accordance with the Mississippi State Board of Health Regulations Governing Individual Onsite Wastewater Disposal Systems and/or Mississippi Department of Environmental Quality, Office of Pollution Control regulations. The proposed method of sewage disposal shall have the approval of the appropriate authority prior to the commencement of any construction and shall comply with all appropriate state laws and regulations.

2. **Recreational Vehicle Waste Disposal Stations**

a. In all recreational vehicle campgrounds, a minimum of one recreational vehicle waste disposal station shall be provided for each 50 recreational vehicle stands, or part thereof, which are not equipped with individual sewer connections.

b. Each station shall be level, convenient of access from the service road, and shall provide easy ingress and egress for recreational vehicles.

c. Construction of Waste Disposal Stations

i. Unless other approved means are used, each station shall have a concrete slab with drain inlet located so as to be on the road (left) side of the recreational vehicle.

ii. The slab shall be not less than 3 feet by 3 feet, at least 5 inches thick and properly reinforced, the surface of which is troweled to a smooth finish and sloped from each side inward to a sewer inlet.

iii. The sewer inlet shall consist of a 4-inch, self-closing foot-operated hatch of approved material with cover milled to fit tight [Figure I]. The hatch body shall be set in the concrete of the slab with the lip of the opening flush with its surface to facilitate the cleansing of the slab with water. The hatch shall be properly connected to a sewer inlet which shall discharge to an approved sanitary sewage disposal facility.

d. Flushing Facilities

i. At all waste disposal stations a means for flushing the recreational vehicle holding tank and the slab shall be provided. It shall consist

of a piped supply of water under pressure, terminating in a valved outlet located and installed as to minimize damage by automobiles or recreational vehicles. The flushing device shall consist of a properly supported riser terminating at least 2 feet above the ground surface, with a 3/4-inch valved outlet to which is screwed a flexible hose [Figure II].

ii. The water supply to the flushing device shall be protected from backflow and back-siphonage, and be equipped with a retractable, spring coiled water delivery device.

iii. Adjacent to the flushing arrangement there shall be posted a sign of durable material, not less than 2 feet by 2 feet in size, and inscribed thereon in clearly legible letters shall be: **"DANGER - NOT TO BE USED FOR DRINKING OR DOMESTIC PURPOSES."**

SOURCE: Miss Code Ann § 41-67-3

Rule 3.2.10. Solid Waste Disposal: All solid waste generated by occupants of the campground shall be stored in a manner approved by the health authority. The disposal of solid waste generated in the campground is the responsibility of the campground owner and shall comply with all appropriate state laws and regulations.

SOURCE: Miss Code Ann § 41-67-3

Rule 3.2.11. Supervision: The person to whom a permit for a campground is issued shall at all times operate the campground in compliance with this regulation and shall provide adequate supervision to maintain the campground, its facilities, and equipment in good repair and in a clean and sanitary condition at all times.

SOURCE: Miss Code Ann § 41-67-3

Rule 3.2.12. **Sanitary Conveniences**

1. **Toilet and Shower Facilities**

a. Comfort stations shall be provided at one or more locations in every recreational vehicle campground. They shall be convenient of access and shall be located within 500 feet from any campsite not provided with water and sewer connections.

b. If facilities for both males and females are housed within the same structure, they shall be separated and appropriately marked.

c. All doors to the exterior shall open outward, be self-closing, and shall be screened by means of a vestibule or wall to prevent direct view of the

interior when the exterior doors are open. Such screening shall not be required on single unit toilet buildings.

d. The interior finish of walls shall be moisture resistant for their entire height to facilitate washing and cleaning.

e. The floors shall be constructed of material impervious to water and shall be easily cleanable. A floor drain shall be provided in the toilet room.

f. All rooms shall be adequately lighted and well ventilated, with all openings effectively screened.

g. Facilities shall be provided to adequately supply hot water to all showers and lavatories during times of peak demand.

2. **Number, Location and Arrangement of Toilets, Urinals, Lavatories, and Showers**

a. All recreational vehicle campgrounds shall be provided with flush toilets. Recreational Vehicle Lodging Parks accepting only self-contained units are exempt from providing toilet and bathhouse accommodations.

b. Facilities shall be provided as follows:

i. A minimum of 1 toilet, 1 lavatory, and 1 shower for each sex shall be provided for each 15 unsewered campsites up to the first 30 such campsites. For each additional thirty unsewered sites or less, an additional toilet, lavatory, and shower shall be provided for each sex.

ii. A minimum of 1 toilet, 1 lavatory and 1 shower for each sex shall be provided for each 50 sewered campsites.

iii. In recreational vehicle campgrounds, urinals shall be substituted for one-third of the toilets required in the men's facilities. Only individual stalls or wall-hung urinals shall be acceptable.

c. Each toilet shall be in a separate compartment and shall be provided with a door with a latch for privacy and a holder or dispenser for toilet paper. Dividing walls or partitions shall be at least 5 feet high and shall be separated from the floor by a space not greater than 18 inches.

d. Toilet compartments shall not be less than 30 inches in width and there shall be not less than 30 inches of clear space in front of each toilet.

3. **Showers:**

a. Each shower provided shall be of the individual type, be screened from view, and be not less than 36 inches by 36 inches in area. Each shower area shall be designed to minimize the flow of water into the dressing area and shall be properly connected to the sewerage system by means of a trapped inlet.

b. A dressing area, equivalent to a minimum of 9 square feet per shower, shall be provided. Each dressing area shall be equipped with a minimum of two clothing hooks per shower.

c. The floors of showers and dressing areas shall have an impervious skid resistant surface.

SOURCE: Miss Code Ann § 41-67-3

Rule 3.2.13. **Exemptions:**

1. All organized campgrounds holding a valid license from the Mississippi State Department of Health, issued under Sections 75-74-1 et. sec., Mississippi Code of 1972 (Mississippi Youth Camp Safety and Health Law) and deer camps regulated under Section 49-7-39 Mississippi Code of 1972 are exempt from this regulation.

2. Section 4.7(2) of this regulation will be waived for all recreational vehicle parks existing prior to the original July 13, 1983 enactment of this regulation that provide water and sewer service from systems that have been approved or permitted by the Mississippi State Department of Health or Department of Environmental Quality .

3. Any parcel or tract of land wherein living sites are available only for the private use of family members.

4. Fairgrounds and stadiums that allow parking of recreational vehicles for short-term events such as fairs, festivals and ball games shall not be defined as a campground and shall be exempt from this regulation.

5. Recreational vehicle dealers, providing factory authorized service and/or repair with, five (5) or fewer overnight parking facilities for customers seeking such Repair/service shall be exempt from this regulation.

SOURCE: Miss Code Ann § 41-67-3

Rule 3.2.14. Penalties: In accordance with Section 41-25-13, Mississippi Code of 1972, violation of this regulation is a misdemeanor. Each day on which a violation thereof continues is a separate offense.

SOURCE: Miss Code Ann § 41-67-3

Rule 3.2.15. Unconstitutionality Clause: Should any section, paragraph, sentence, clause, or phrase of this regulation be declared unconstitutional or invalid for any reason, the remainder shall not be affected thereby.

SOURCE: Miss Code Ann § 41-67-3

Figure I – Sewer Inlet Cover

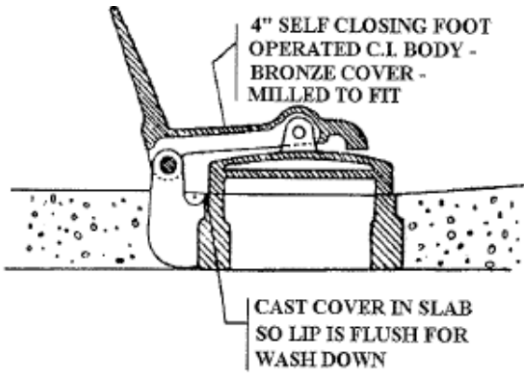

SOURCE: Miss Code Ann § 41-67-3

Figure II – Flushing Device

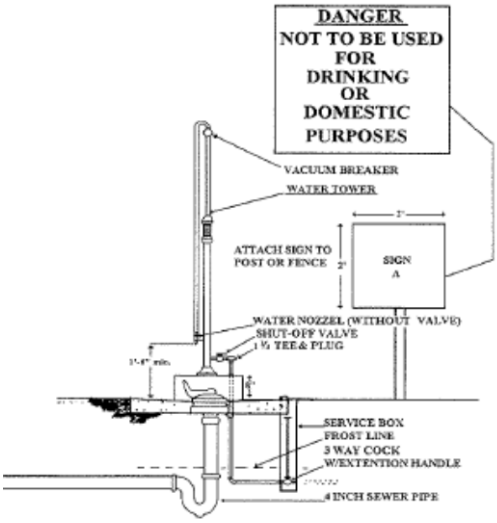

SOURCE: Miss Code Ann § 41-67-3

Chapter 4. SOIL AND SITE EVALUATION

Subchapter 1. INTRODUCTION

Rule 4.1.1. **Authority:** The State Board of Health is authorized to promulgate these rules under and by virtue of Section 41-3-15(1)(b)(ii), (4)(a)(b)(c)(e)(h)(i), Section 41-3-17 and Section 41-67-1 through 41-67-39, Mississippi Code of 1972, Annotated.

SOURCE: Miss Code Ann. §41-67-3

Rule 4.1.2. **Definitions:**

1. Applicant – an owner, lessee, or developer.

2. Available Space – the area necessary for the system and space allowance for future expansion, repair or replacement.

3. Board – the Mississippi State Board of Health. Section **41-67-2(c)**

4. Department – the Mississippi State Department of Health. Section **41-67-2(h)**

5. Drainage way – a course or channel along which water moves in draining an area.

6. Department of Environmental Quality – the Mississippi Department of Environmental Quality (MDEQ), Office of Pollution Control.

7. Flooding – the temporary covering of the soil surface by flowing water from any source, such as streams overflowing their banks, runoff from adjacent or surrounding slopes, inflow from high tides, or any combination of sources. The frequency of the event determines the limitation assigned to each category.

    a. Rare: Flooding unlikely but possible under unusual weather conditions; 1 to 5 percent chance of flooding in any year or 1 to 5 times in 100 years. (Slight limitations; includes: None or no chance of flooding).

    b. Occasional: Flooding occurs infrequently under usual weather conditions; 5 to 50 percent chance of flooding in any year or more than 5 to 50 times in 100 years. (Moderate limitations.)

    c. Frequent: Flooding is likely to occur often under usual weather conditions more than a 50 percent chance of flooding in any year or more than 50 times in 100 years, but less than a 50 percent chance of flooding in all months in any year. (Severe limitations.)

    d. Very Frequent: Flooding is likely to occur very often under usual weather conditions with a more than a 50 percent chance of flooding in all months of any year. (Extreme limitations.)

8. Flood-prone Area – an area that is generally subject to being flooded 50 times in 100 years or greater than a 50 percent chance in any year. This definition refers to an area that is subject to frequent flooding as observed, or as indicated by soil characteristics defined in the standards of the *National Soil Survey Handbook, United States Department of Agriculture.*

9. Fragipan – A dense, natural subsurface layer of hard soil with relatively slow permeability to water, mostly because of its extreme density or compactness rather than its high clay content or cementation.

10. Generator – any person whose act or process produces sewage or other material suitable for disposal in an Individual On-site Wastewater Disposal System. Section **41-67-2(i).**

11. High Shrink Swell Soils (H3S) – soils that have relatively high clay content and a dominant mineral type that causes significant swelling when wet and shrinking when dry.

12. Hydric Soils – soils that formed under conditions of saturation, flooding or ponding long enough to develop anaerobic conditions in the upper part.

13. Impervious – resistant to penetration by air, water, and roots.

14. Maximum Flexibility – the latitude of judgment to be used by the Department to recommend all applicable wastewater disposal systems in compliance with statutes, regulations and rules of the State of Mississippi.

15. Munsell Soil Color Chart – a color space standard that specifies colors based on 3 color dimensions: hue, value (lightness) and chroma (color purity).

16. Natural Ground Surface – the more or less naturally occurring surface of the earth which has not been significantly altered or disturbed by artificial means such as cutting and/or filling (does not include plowing for agricultural purposes). Except where severely eroded, the ground surface normally begins with a dark, organic matter enriched layer (topsoil) of varying thickness followed usually with a brighter colored layer (subsoil) increasing with clay content with depth.

17. Permeability – a qualitative estimate of the relative ease with which soil transmits water.

18. Person – any individual, trust, firm, joint-stock company, public or private corporation (including a government corporation), partnership, association, state, or any agency or institution thereof, municipality, commission, political subdivision of a state or any interstate body, and includes any officer or governing or managing body of any municipality, political subdivision, or the United States or any officer or employee thereof. Section **41-67-2(m).**

19. Ponding – standing water in a depression that is removed only by percolation, evaporation, and/or transpiration that lasts greater than 7 days.

20. Redoximorphic Features - a color pattern in a soil due to loss (depletion) or gain (concentration) of pigment compared to the matrix color, formed by oxidation/ reduction of Fe (iron) and/or Mn (magnanese) coupled with their removal, translocation, or accrual; or a soil matrix color controlled by the presence of Fe+2. *Field Book for Describing and Sampling Soils, NRCS, USDA.*

21. Restrictive Horizon/Layer (Water Movement) – a layer in the soil more than 3 inches thick that significantly retards the downward movement of water or hinders acceptable treatment and renovation of effluent. A restrictive horizon/layer generally has Redoximorphic Features associated with it, at least in the upper part of the restrictive layer, as well as in the horizon above it.

22. Seasonal High Water Table – the water table that is part of a discontinuous saturated zone in a soil, as indicated in the Munsell Soil Color Chart, by a value of 4 or more and a chroma 2 or less (Munsell Soil Color Chart) Redoximorphic Feature.

23. Sensitive Water – public or private waters used for recreation (swimming, skiing, fishing), shellfish harvesting, potable water intake or other situations where people are likely to come into contact.

24. Slope – deviation of a plane surface from the horizontal; when given in percent, it is the rise or fall of the land surface in feet per 100 feet of horizontal distance (i.e. linear, concave and convex)

25. Soil – a medium used to filter effluent from an Individual On-site Wastewater Disposal System in order to remove bacterium, nutrients, and viruses. The ideal medium is 25 percent water, 25 percent air, 45 percent mineral and 5 percent organic matter.

26. Soil Auger – a short cylinder with a cutting edge attached to a rod and handle.

27. Soil and Site Evaluation – the evaluation to determine if a property can support an Individual On-Site Wastewater Disposal System by use of a soil auger to a depth up to 5 feet to determine the soil texture, color, mottling and seasonal water table.

28. Soil Horizon – a layer of soil approximately parallel to the land surface and differing from adjacent genetically related layers in physical, chemical, and biological properties or characteristics including but not limited to color, structure, texture, consistence and Ph.

29. Soil Profile – a description of a soil horizon based on depth, texture, color, and mottles resulting in the correlation of the seasonal water table and restrictive horizon. This refers to Soil Horizons O, A, E, B, C and R.

30. Soil Resource Map – a general representation. **Note:** Figure I

31. Soil Texture – the numerical proportion (percent by weight) of sand, silt, and clay in a soil, *United States Department of Agriculture (USDA).*

32. Soil Mapping Unit – a soil series based on texture of the surface Soil Horizon. Examples include: SME – Smithdale sandy loam 12 to 17 percent, SbA – Savannah loam, 0 to 2 percent slopes

33. Texture Class – standardized terms used to convey textural makeup of the fine-earth fraction less than 2 *millimeters* in diameter. The fine earth fraction includes sand (2.0 - 0.05*mm* in size), silt (0.05*mm* - 0.002*mm* in size) and clay (less than 0.002*mm* in size) particles, *United States Department of Agriculture (USDA).* **Note:** Figure II

34. Topography – The relative position and elevations of the natural or manmade features of an area that describe the configuration of its surface (i.e., hilly, rolling, level, steep, severe, moderate, etc.).

35. Vertical Separation – the vertical separation between the bottom of the trench and a restrictive layer/horizon or Seasonal High Water Table.

36. Watercourse – any natural lake, river, creek, cut, or other natural body of fresh water or channel having definite banks and bed with visible evidence of the flow or occurrence of water, except such lakes without outlet to which only one (1) landowner is riparian.

37. Water Table – the highest part of the soil or underlying rock that is wholly saturated with water. In some places an upper or Seasonal High Water Table may be separated from a lower one by a dry zone.

SOURCE: Miss Code Ann. §41-67-3

Subchapter 2. SOIL AND SITE EVALUATION METHOD

Rule 4.2.1. This Soil and Site Evaluation method will be used by Environmentalists, Certified Professional Evaluators and registered Professional Engineers for the design of all Individual On-site Wastewater Disposal Systems. Prior to construction of any dwelling or placement of any mobile, modular, or permanently constructed residence.

SOURCE: Miss Code Ann. §41-67-3

Rule 4.2.2. **Criteria:**

1. Absence of Frequent Flooding;

2. Landscape position;

3. Drainage way;

4. Slope (topography);

5. Depth to seasonal high water table (chroma 2 or less) in inches;

6. Depth (inches) to restrictive Soil Horizon (i.e., bedrock, fragipan, plinthite, etc.);

7. Soil texture, Munsell Soil Color Chart, and depth (inches) of Soil Horizons;

8. Setbacks

9. Residence, property line, or other external structures

10. Water supply

11. Sensitive Waters

12. Available Space.

SOURCE: Miss Code Ann. §41-67-3, Mississippi State Department of Health's (MSDH) – Title 15, Part 3, Subpart 77, Chapter 5, United States Environmental Protection Agency's (*EPA) – On-site Wastewater Treatment Systems Manual EPA/625/R-00/008.*

Rule 4.2.3. Texture-by-Feel Analysis, *United States Department of Agriculture, Natural Resource Conservation Service*

1. The soil determination will be made based on soil borings to a depth up to 5 feet or to a depth sufficient to reach a restrictive Soil Horizon. Restrictive soil or site conditions may preclude the use of any Individual On-site Wastewater Disposal System.

2. The soil information such as texture, structure, landscape position, color and seasonal high water table depths, will determine the treatment and disposal system to be installed, constructed and approved by the Department.

3. The Soil Profile is recorded in inches on the Soil Profile Sheet by indicating the following:

4. Natural Ground Surface (0 inches)

5. Depth of each Soil Horizon with:

    a. The Soil Texture. **Note:** Figure II

    b. The Munsell Soil Color Chart (moist soil conditions.)

    c. Seasonal High Water Table indicator, if applicable:

i. Seasonal High Water Table indicators may be determined by the presence of colors of chroma 2 or less (Munsell Soil Color Chart) at ∃ 2 percent of soil volume in mottles or matrix of a Soil Horizon.

ii. Seasonal High Water Table indicator may be determined by the indication of redoximorphic features at ∃ 2 percent of soil volume of a Soil Horizon in accordance with methods in the *Field Book for Describing and Sampling Soils, NRCS, USDA.* This procedure shall take precedence over the Sub item (a) of this Section. The Field Book is hereby incorporated by reference, including any subsequent amendments and editions.

iii. Another method to determine Seasonal Water Table indicators is outlined in Section 104.03.

d. Restrictive Horizon depth, if applicable.

SOURCE: Miss Code Ann. §41-67-3

Figure 1 – Soil Resource Areas of Mississippi

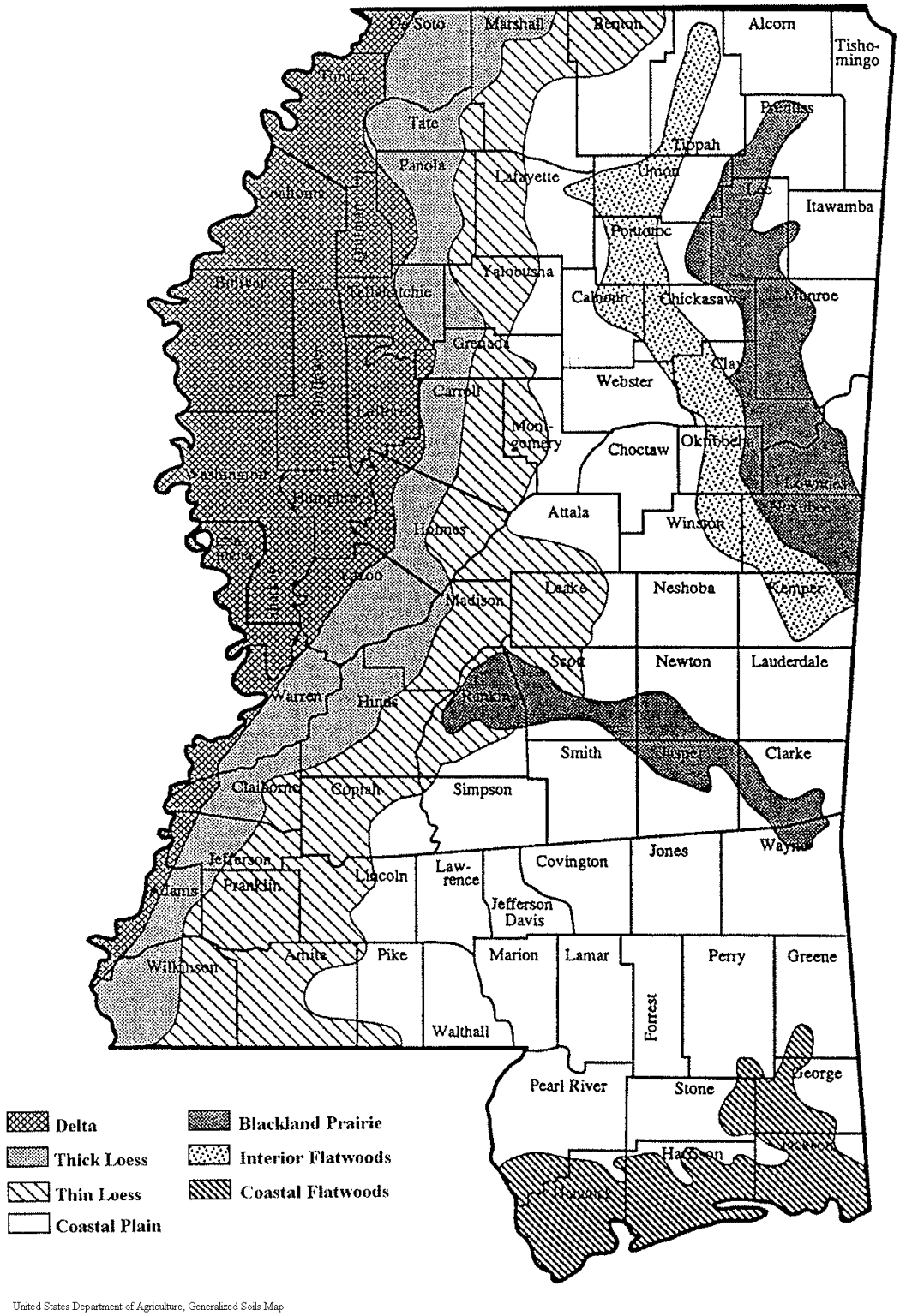

United States Department of Agriculture, Generalized Soils Map

SOURCE: Miss Code Ann. §41-67-3

Figure 2 – Texture-by-Feel Analysis

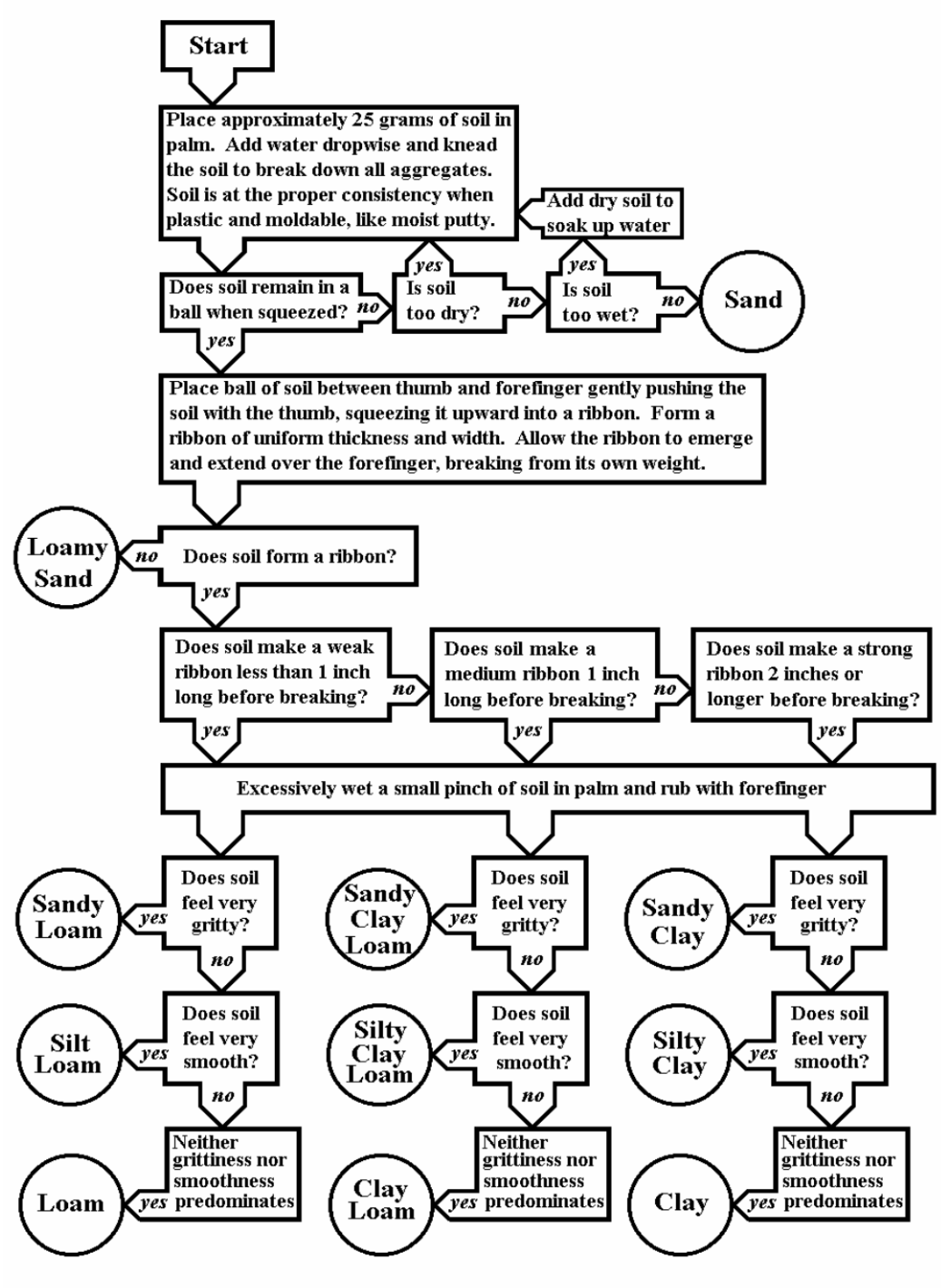

SOURCE: Miss Code Ann. §41-67-3

Figure 3 – Texture Class Triangle

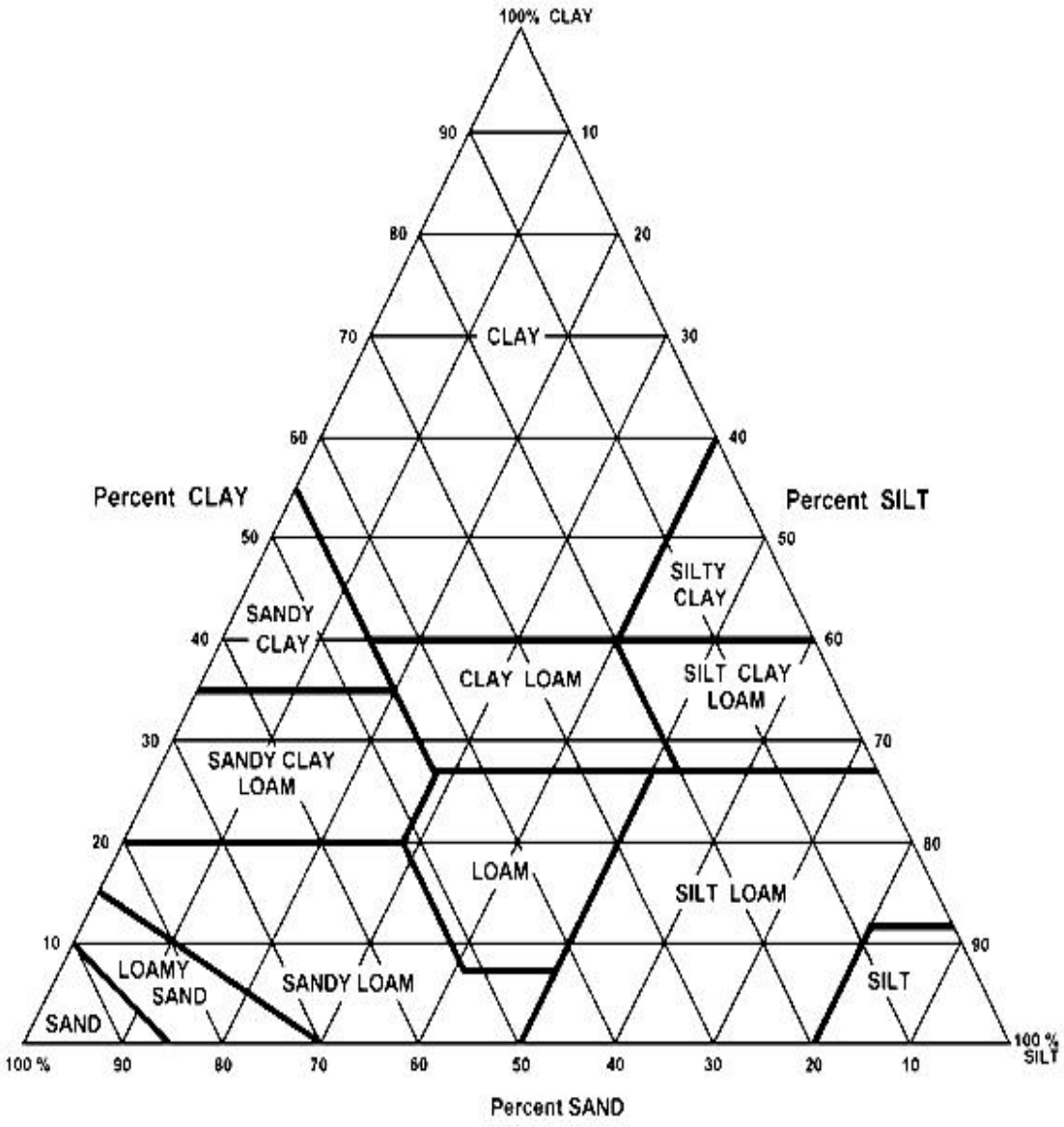

SOURCE: Miss Code Ann. §41-67-3

Chapter 5. INDIVIDUAL ONSITE WASTEWATER DISPOSAL DESIGN STANDARD

Subchapter 1. SEPTIC TANKS

Rule 5.1.1. **Definitions:**

1. Air Space – the space required between the lid of a septic tank and the bottom of the outlet pipe for the capture of gases generated by the anaerobic bacteria. Vent pipes within the facility or residence plumbing remove these gases from the septic tank.

2. Anaerobic – a process that utilizes bacteria that grow only without free dissolved oxygen. They obtain oxygen from breaking down complex organic substances

3. Filter – a device used to remove solids from the effluent of a septic tank.

4. Access Opening – a resealable opening in the treatment unit that allows for inspection, maintenance and entry if necessary.

5. Septic Tank – Water-tight, covered receptacle for treatment of sewage; receives the discharge of sewage from a building, separates settleable and floating solids from the liquid, digest organic matter by anaerobic bacterial action, stores digested solids through a period of detention, allows clarified liquids to discharge for additional treatment and final dispersal, and attenuates flows.

6. Synthetic Fiber Reinforcement – Synthetic fibers of polypropylene or polypropylene/polyethylene blend used in place of welded wire or other accepted reinforcing materials for the purpose of providing structural integrity to concrete.

SOURCE: Miss Code Ann. §41-67-3

Rule 5.1.2. **General:** Septic tanks shall be constructed from concrete, steel, fiberglass or polyethylene. The septic tank size is based on the number of bedrooms or twice the daily flow for nonresidential application.

SOURCE: Miss Code Ann. §41-67-3

Rule 5.1.3. **Location:**

1. Septic tanks shall not be located in depressed areas where surface water will accumulate. This water may enter the septic tank causing it to flood.

2. The area over the septic tank shall not be used for vehicular traffic or vehicular parking.

3. The septic tank must be installed according to the following minimum distances:

a. foundation five (5) feet

b. property lines ten (10) feet

c. potable water supplies and all private wells fifty (50) feet

4. Septic tanks shall not be located under dwellings or other structures.

5. Where all or part of the Individual On-site Wastewater Disposal System is proposed to be installed on property other than the owner's, an easement in perpetuity shall be legally recorded in the proper county. The easement shall be of sufficient area to permit access, construction and maintenance of the Individual On-site Wastewater Disposal System.

6. Easements or right-of-way areas for utilities, surface or subsurface drainage, roads, streets, ponds or lakes shall not be used as available space for location of Individual On-site Wastewater Disposal Systems.

SOURCE: Miss Code Ann. §41-67-3

Rule 5.1.4. **Design:** All septic tanks (prefabricated concrete, steel, fiberglass or polyethylene) must be designed according to minimum standards as follows:

1. General

a. The septic tank shall be watertight, structurally sound and not subject to excessive corrosion or decay. The outlet of the septic tank should be placed so as not to be located below the Seasonal High Water Table.

b. The minimum hydraulic detention time of the septic tank must be two (2) days (48 hours) based on daily sewage flows. In no case shall the septic tank have a minimum effective liquid capacity of less than seven hundred fifty (750) gallons.

c. All tanks manufactured in two (2) sections must have an interlocking type joint. Tanks manufactured in two sections must be sealed and joined with an approved sealant such as butyl rubber or other approved pliable sealant that is waterproof, corrosion-resistant and is warranted by the manufacturer for sealing concrete septic tanks.

d. All septic tanks with a capacity of greater than fifteen hundred (1,500) gallons shall be deemed structurally sound by a licensed Professional Engineer via stamped letter.

2. Tank Dimensions

a. The inside length of a rectangular septic tank shall be a minimum of 1.5 times the width. The minimum inside width of a septic tank shall not be less than 3.5 feet.

b. The minimum liquid depth of all septic tanks shall be thirty (30) inches.

c. A minimum air space of seventeen (17) percent of the liquid depth must be provided.

3. Tank Inlet and Outlet

a. The inlet and outlet of the septic tank must be large enough to accommodate a four (4) inch schedule forty (40) pipe and be equipped with a sanitary tee or baffle.

b. The inlet and outlet pipes must extend a minimum of three (3) feet onto undisturbed soil before entering and after exiting the septic tank.

c. The inlet invert shall enter the septic tank a minimum of two (2) inches above the liquid level of the tank. The inlet tee or baffle shall be provided to divert the incoming sewage downward and extend a minimum of six (6) inches below the liquid level of the tank.

d. The outlet tee or baffle shall extend eighteen (18) inches below the liquid depth of the tank.

4. Baffle Walls and Two Compartment Tanks

a. The first compartment shall be between sixty (60) and sixty-seven (67) percent of the total capacity of the tank.

b. The baffle forming the two (2) compartments shall have an opening four (4) to six (6) inches wide, located in the center of the baffle and at fifty (50) percent of the liquid depth of the tank.

c. If the tank is to be made of concrete, the baffle wall shall be constructed of concrete and be structurally sound. This shall be interpreted as a minimum of three thousand (3000) pound concrete containing six (6) inch by six (6) inch number ten (10) concrete wire and having a minimum thickness of two and one-half inches.

d. Baffle walls shall be securely and permanently fastened to the septic tank. All fasteners shall be of sound and durable material not subject to corrosion or decay.

5. Access Openings

a. A resealable opening above each tee and baffle must be provided in each tank top. These openings provide for cleaning or rodding out of the inlet or outlet pipe and access for pumping.

b. Openings covering the inlet and outlet shall be accessible and visible at finished grade once the septic tank is covered.

c. Rectangular openings shall be a minimum of fifteen (15) inches by fifteen (15) inches as measured from the bottom side of the lid of the septic tank.

d. Circular openings shall be a minimum diameter of seventeen (17) inches as measured from the bottom side of the lid of the septic tank.

e. Multi-slab tank lids and one piece lids that can be removed manually to include but not limited to steel and fiberglass require the slab or lid over the inlet and outlet tee or baffle to have a minimum access opening of 6 inches by 6 inches if rectangular or 8 inches in diameter if round.

f. All concrete covers, access openings and slabs must have a handle of 3/8 inch steel rebar or other corrosive resistant material of the size necessary to facilitate the removal of the cover, opening or slab.

SOURCE: Miss Code Ann. §41-67-3

Rule 5.1.5. **Effluent Filters:** Effluent filters shall meet the following criteria:

1. The filter shall retain all partials greater than one-eight (1/8) inch in size.

2. The assembly shall perform as a conventional tank outlet, meeting the requirements of Rule 5.1.4.3, when the filter is removed.

1. The filter must be designed to handle the flow of the system it is to serve and not result in excessive maintenance. For a single family dwelling, maintenance is considered “excessive” when the filter requires service or cleaning more than one (1) time per year. Service shall be performed each time the tank is pumped, and in accordance with manufacturer’s specifications.

SOURCE: Miss Code Ann. §41-67-3

Rule 5.1.6. **Minimum Standards for Septic Tank Construction**

1. General

a. All septic tanks manufactured for sale in the state of Mississippi shall bear an imprint identifying the manufacturer, the serial number assigned to the manufacturer's plans and specifications approved by the Department, the liquid or working capacity of the tank and be marked with the date of manufacture. These imprints and markings must be visible at the time of inspection by the Department.

b. All openings and lids shall be capable of being sealed in a way that will prevent entrance of surface water and groundwater.

c. Tank openings shall be securely fastened or sealed to prevent unwarranted access to the contents of the tanks vandal, tamper and child resistant. Acceptable protection of openings may include, but is not limited to:

i. A padlock

ii. An “O” ring with twist lock cover requiring special tools for removal

iii. Covers weighing sixty-five (65) pounds or more, net weight

iv. Stainless steel or other corrosion resistant fasteners for fiberglass or polyethylene lids.

2. Prefabricated Concrete Septic Tank

a. A minimum twenty-eight (28) -day concrete compressive strength of three thousand (3,000) pounds per square inch must be used in the construction of the septic tank. The concrete must achieve a minimum compressive strength of two thousand five hundred (2,500) pounds per square inch before removal of the tank for the manufactured site. It shall be the responsibility of the manufacturer to certify that this condition has been met before shipment. Accelerated curing in the mold by use of propane gas or other fuels is prohibited, except by accepted methods and upon approval of the Department.

b. Lids, walls and bottom thickness must be a minimum of three (3) inches. The bottom and walls must be a monolithic pour.

3. Steel Septic Tanks

a. Steel septic tanks must meet Underwriter’s Laboratory Standard UL-70 for the tank coating. Only tanks listed as approved under the current published listing will be approved for installation.

4. Fiberglass and Polyethylene Septic Tanks

a. Resins and sealants used in the tank manufacturing process shall be capable of effectively resisting the corrosive influences of the liquid components of sewage, sewage gases and soil burial. Materials used shall be formulated to withstand shock, vibration, normal household chemicals, earth and hydrostatic pressure when either full or empty.

b. Not less than thirty (30) percent of the total weight of the tank shall be fiberglass reinforcement. Fiberglass tanks with an effective liquid capacity of not over one thousand five hundred (1,500) gallons shall have a minimum wall thickness of 1/4 inch. However, a wall thickness of not less than 3/16 inch will be allowed in small isolated areas of a tank.

c. Internal surfaces shall be coated with an appropriate gel coating to provide a smooth, porefree, watertight surface.

d. Tanks shall be constructed so that all parts of the tank meet the following mechanical requirements:

i. Ultimate tensile strength - minimum twelve thousand (12,000) PSI when tested in accordance with ASTM D 638-89, Standard Method of Test for Tensile Properties of Plastics.

ii. Flexural strength - minimum nineteen thousand (19,000) PSI when tested in accordance with D 790-86, Standard Method of Test for Flexural Properties of Unreinforced and Reinforced Plastics and Electrical Insulating Materials.

iii. Flexural modules of elasticity - minimum eight hundred thousand (800,000) PSI when tested in accordance with ASTM D 790-86 , Standard Method of Test for Flexural Properties of Unreinforced and Reinforced Plastics and Electrical Insulating Materials.

e. A test report from an independent testing laboratory is required to substantiate that individual tank design and material formulations meet the requirements of Rule 5.1.6.4.d.

SOURCE: Miss Code Ann. §41-67-3

Rule 5.1.7. **Minimum Standards for Concrete Reinforcement:**

1. Tanks Reinforced with Welded Steel Concrete Wire

a. The reinforcing wire shall be a minimum number ten (10) gauge six (6) inch on centers. The reinforcing wire shall be lapped a minimum of six (6) inches.

b. Lids for prefabricated septic tanks shall have one (1) 3/8 inch steel reinforcing rod per foot of length and width.

2. Tanks Reinforced with Synthetic Structural Fibers

a. Manufacturer of synthetic structural fibers shall provide certification showing fibers meet the requirements of outlined in this section.

b. Synthetic fibers shall be monofilament and made of a polypropylene or polypropylene/polyethylene blend in accordance with ASTM C 1116, Section 4.1.3, Part III.

c. Synthetic structural fibers shall have minimum length of 1.5 inches.

d. Synthetic structural fibers shall produce concrete with a minimum average residual strength of one hundred fifty (150) psi when tested in accordance with ASTM C 1399.

e. Fiber dosage rate shall be a minimum of 3 lb/yd^3 of concrete.

SOURCE: Miss Code Ann. §41-67-3

Rule 5.1.8. **Maintenance:** The septic tank should be pumped at a frequency depending on the wastewater flow. The recommended pumping cycle is three (3) to five (5) years, but pumping should not occur until the settleable solids have reached a depth of 1/3 the septic tank liquid depth. This can be determined by "sticking" the tank.

SOURCE: Miss Code Ann. §41-67-3

Rule 5.1.9. **Septic Tank Sizing:** The effective liquid capacity of septic tanks for dwellings shall be based on the number of bedrooms proposed or anticipated as shown in the table below:

Number of Bedrooms	**Number of Occupants**	**Minimum Effective Liquid Capacity (gallons) without baffle or effluent filter**	**Minimum Effective Liquid Capacity (gallons) with baffle or effluent filter**
2 or less	4 or less	750	750
3	6	900	900
4	8	1200	1000
5	10	1500	1250
6	12	1800	1500

For each additional bedroom add 260 gallons
For each additional occupant over 2 per bedroom add 130 gallons

For a nonresidential application, the septic tank will be sized at twice the estimated daily flow

SOURCE: Miss Code Ann. §41-67-3

Subchapter 2. ADVANCED TREATMENT SYSTEMS

Rule 5.2.1. **General:**

1. All Advanced Treatment Systems installed in the state of Mississippi shall be in compliance with the current revision of the *National Sanitation Foundation/American National Standard Institute International Standard 40 or 245* testing protocol, hereby incorporated into regulation by reference and shall be certified by an approved third party certification program. The Division will maintain a current listing of registered and certified manufacturers. The current list will be made available by the Department.

2. The Department shall only approve individual Advanced Treatment Systems that have no discharge of wastewater off the property of the generator.

3. All Advanced Treatment Systems must be installed according to the Certified Manufacturer's specifications by a factory-trained installer that is an authorized representative of the manufacturer.

SOURCE: Miss Code Ann. §41-67-3

Rule 5.2.2. **Definitions:**

1. Aerator – a mechanical device that provides dissolved oxygen to an Advanced Treatment System.

2. Advanced Treatment System – treatment component that utilizes oxygen to degrade or decompose wastewater.

SOURCE: Miss Code Ann. §41-67-3

Rule 5.2.3. **Location:**

1. Advanced Treatment Systems shall be installed level on undisturbed soil. If leveling or elevation change is necessary, the Advanced Treatment System must be placed on a bed of sand.

2. It is recommended the outlet of the Advanced Treatment System should be placed so as not to be below the Seasonal High Water Table.

3. An Advanced Treatment System should not be located in an area that collects surface water. This water may enter the Advanced Treatment System causing a

failure by flooding. This flooding will cause the effluent to be discharged before it is properly treated.

4. The Advanced Treatment System must be installed according to the following minimum distances:

   a. foundations five (5) feet

   b. property lines ten (10) feet

   c. potable water supplies and all private wells fifty (50) feet

5. The area over the Advanced Treatment System shall not be used for vehicular traffic or vehicular parking.

6. Advanced Treatment Systems shall not be located under dwellings or other structures.

7. Where all or part of the Individual On-site Wastewater Disposal System is proposed to be installed on property other than the owner's, an easement in perpetuity shall be legally recorded in the proper county. The easement shall be of sufficient area to permit access, construction and maintenance of the Individual On-site Wastewater Disposal System.

8. Easements or right-of-way areas for utilities, surface or subsurface drainage, roads, streets, ponds or lakes shall not be used as available space for location of Individual On-site Wastewater Disposal Systems.

SOURCE: Miss Code Ann. §41-67-3

Rule 5.2.4. **Inlet and Outlet:**

1. The inlet and outlet must be schedule forty (40) pipe four (4) inches in diameter. A three (3) inch house sewer stubout, when used, shall be connected to the four (4) inch pipe from the septic tank inlet using manufactured fittings designed for that purpose.

2. The inlet and outlet pipe (schedule 40 four (4) inch) must extend a minimum of three (3) feet onto undisturbed soil before entering and after exiting the Advanced Treatment System.

SOURCE: Miss Code Ann. §41-67-3

Rule 5.2.5. **Maintenance**

1. All advanced Treatment Systems should be pumped at a frequency based on the

wastewater volume generated by the residence or establishment. The pumping cycle will depend on the level of the sludge in the Advanced Treatment System. The sludge should not be allowed to accumulate more than the recommended depth specified by the manufacturer of the Advanced Treatment System. If the sludge is allowed to discharge, a clogging problem may occur if any additional treatment or disposal system is used in conjunction with the Advanced Treatment System.

1. All Advanced Treatment Systems shall be maintained and inspected as required by the Certified Manufacturer.

SOURCE: Miss Code Ann. §41-67-3

Rule 5.2.6. **Aerators:** The type of aerator used with the Advanced Treatment System is mandated by the manufacturer. The maintenance of the aerator is outlined in the manual provided by the Certified Manufacturer or his authorized representative.

SOURCE: Miss Code Ann. §41-67-3

Rule 5.2.7 **Sizing:**

Number of Bedrooms	Minimum Capacity (gallons per day)
2 or less	400
3	400
4	520
5	650
6	780

For each additional bedroom add 130 gallons
For each additional occupant over 2 per bedroom add 65 gallons
For a nonresidential application, use the estimated daily flow

SOURCE: Miss Code Ann. §41-67-3

Subchapter 3. PUMPS AND PUMP CHAMBERS

Rule 5.3.1. Effluent pumping is required in cases where the disposal site is at a higher elevation than the treatment facility or the disposal system is one that utilizes pressure distribution. In these cases the effluent must be moved using pumps. Pumps and associated equipment must be manufactured and warrantied for the purpose of pumping treated wastewater. In all installations the manufacturer's recommendations must be followed. Pumps and pressure lines must be sized correctly to assure that the system is hydraulically sound.

SOURCE: Miss Code Ann. §41-67-3

Rule 5.3.2. **General:**

1. Pump chambers shall have a storage volume as required per each system type, for subsurface drip, overland disposal and spray systems. Pump chambers for septic tank systems shall be a minimum of 400 gallons.

2. The pump chamber shall be constructed to withstand normally encountered earth pressures and manufactured with approved materials resistant to the corrosive effects of wastewater, common household chemicals and chemicals used for disinfection.

3. The pump chamber shall be equipped with an audible high water alarm.

4. The pump chamber shall have a grade level access large enough to allow servicing and/or removal of the largest component in the chamber. Access ports shall be protected against unauthorized entrance.

5. The pump chamber shall be vented through the grade level access or by means of a separate vent. In either case the vent shall be a minimum of one inch in diameter.

6. All openings shall be sealed with a mastic, butyl rubber or other pliable sealant that is waterproof, corrosion resistant and approved for use in contact with wastewater and chemicals used for disinfection, in a manner to prevent the entrance of surface and groundwater.

7. When pumping to normally gravity fed systems the use of a stilling chamber (baffled distribution box) shall be required. The stilling chamber must be sized larger than the maximum volume pumped in a single dose so as not to flood the chamber.

8. The stilling chamber shall be constructed and placed so it will drain between doses into the treatment and/or disposal site.

SOURCE: Miss Code Ann. §41-67-3

Rule 5.3.3. **Minimum Pump Specifications:**

1. The pump shall be equipped with a low water cutoff to prevent damage during low water conditions in the dosing chamber.

2. The pump shall be constructed of corrosion resistant materials suitable for effluent pumping.

3. The pump shall be sized per manufacturers' specifications to meet or exceed the hydraulic requirements of the system.

4. The pump shall be installed in compliance with manufacturers' specifications so as not to violate the pump warranty.

5. The suction and pressure lines shall be PVC schedule 40 or equal and be sized to meet the hydraulic requirements of the system.

SOURCE: Miss Code Ann. §41-67-3

Rule 5.3.4. Electrical: All electrical components shall be in compliance with the National Electrical Code.

SOURCE: Miss Code Ann. §41-67-3

Subchapter 4. AGGREGATE

Rule 5.4.1. In a conventional onsite wastewater system treatment begins in the septic tank, under anaerobic conditions. Final treatment and disposal takes place in the soil of the drainfield, an aerobic environment. It is necessary for this aerobic condition to exist in the soil of the drainfield for proper treatment of the effluent.

SOURCE: Miss Code Ann. §41-67-3

Rule 5.4.2. **Definitions:**

1. Aggregate System - any subsurface disposal system that utilizes gravel, crushed stone, tire chips or other approved aggregate media.

2. Conventional Subsurface Aggregate Disposal System - any gravity-fed subsurface disposal field utilizing a loose aggregate media ranging from 36 to 12 inches in depth.

   a. Standard Subsurface Disposal 25 in. to 36 in.

   b. Shallow Subsurface Disposal 12 in. to 24 in.

3. Tire Chips - Coarse aggregate made from recycled tires to substitute volumetrically for mineral aggregate for use as media in a conventual subsurface disposal field.

SOURCE: Miss Code Ann. §41-67-3

Rule 5.4.3. **Site Evaluation:**

1. Information obtained during the soil and site evaluation will determine which type(s) of IOWDS may be utilized for an individual lot.

2. Prior to completing the Soil and Site Evaluation/System Recommendation, the Environmentalist shall visit the lot and conduct the soil and site evaluation.

3. The soil determinations will be made based on soil borings to a depth of five feet or to a depth sufficient to reach a restrictive horizon. Restrictive soil or site conditions may preclude the use of any subsurface disposal system.

4. A soil and site evaluation will be based on the following criteria:

    a. Absence of or protection from frequent flooding.

    b. Landscape position with good surface runoff.

    c. Slopes of less than 15%.

    d. Depth to high water table of greater than four feet.

    e. Depth to bedrock, fragipan or plinthite of greater than four feet.

    f. Soil texture and color defined by the Natural Resource Conservation Service as indicating good drainage and suitability for soil absorption, based on a soil boring of five feet.

    g. Available area in which to install an individual onsite wastewater disposal system meeting all requirements of this regulation. The area for repairs and future extensions shall be no less than 50% of the space required for the recommended system. Systems utilizing surface land application discharge are exempt from the 50% additional area requirement.

    h. The non compliance of one or more of the above items may require a design alteration of an underground system.

SOURCE: Miss Code Ann. §41-67-3

Rule 5.4.4. **Location of Onsite Wastewater Disposal Systems:**

1. All components of the onsite wastewater disposal system shall be located a minimum of:

    a. five (5) feet from any dwelling.

    b. ten (10) feet from any property line.

2. Any vessel holding wastewater shall be located a minimum of 50 feet from any public, private or individual potable water source.

3. The effluent disposal field shall be located at a lower elevation or in a landscape position that will preclude any surface runoff from flowing in the direction of the well site and a minimum of 100 feet from any public, private or individual potable water source.

4. Potable water lines shall not pass under or through any part of the sewage disposal system. Where a water supply line must cross a sewer line, the bottom of the water service within ten feet of the point of crossing, shall be at least 12 inches above the top of the sewer line. The sewer line shall be of Schedule 40 pipe with cemented joints at least ten feet on either side of the crossing. Water and sewer lines shall not be laid in the same trench. The water and sewer lines, when laid on the same elevation , shall maintain a minimum separation distance of 10 feet.

5. The surface of or the surface above the disposal field shall not be used for vehicular traffic or vehicular parking.

6. No portion of an onsite wastewater disposal system shall be located under dwellings or other permanent structures.

7. Effluent disposal systems shall not be located in depressed areas where surface water will accumulate. Provision shall be made to minimize the flow of surface water over the effluent disposal field.

8. Subsurface wastewater disposal field setbacks from sensitive waters. [See Table I].

9. Slopes of greater than 30% shall not be considered for subsurface disposal installation.

10. Where all or part of the onsite wastewater disposal system is proposed to be installed on property other than the owner's, an easement in perpetuity shall be legally recorded in the proper county. The easement shall be of sufficient area to permit access, construction and maintenance of the onsite sewage disposal system.

11. No site for an effluent disposal field or expansion area shall be approved which is located wholly within an area which is frequently flooded, swamp, marsh, or wetland. Except that if permits have been issued by the proper regulatory agency authorizing the use of wetlands for building sites, the property shall be evaluated using standard soil and site criteria for IOWDS.

12. When a proposed lot is located partially within a frequently flooded area, that portion of said lot not within the flood prone area may be considered for approval for the effluent disposal field.

13. There shall be maintained a minimum of 12 inches of unsaturated soil between the bottom of the subsurface disposal system and a perched or seasonal water table in soils that contain a restrictive horizon (fragipan, chalk, bedrock, clay or silty clay) within five feet of the surface.

14. There shall be maintained a minimum of 24 inches of unsaturated soil between the bottom of the subsurface disposal system and any perched or seasonal water table in soils that do not contain a restrictive horizon (fragipan, chalk, bedrock, clay or silty clay) within five feet of the surface.

15. Easements or right-of-way areas for utilities, surface or subsurface drainage, roads, streets, ponds or lakes shall not be used as available space for location of individual onsite sewage disposal systems.

SOURCE: Miss Code Ann. §41-67-3

Rule 5.4.5. **Underground Absorption:**

1. The size of the subsurface sewage disposal system shall be determined by soil texture [See Table II].

2. Soils with excessively rapid permeability rates, gravel and coarse sand, shall be considered unsuitable for subsurface disposal unless the native soil is replaced with a suitably thick (greater than two feet) layer of loamy sand or sand textured soil.

3. Soils with excessively slow permeability rates, silty clay and clay, shall be considered unsuitable for conventional subsurface disposal.

4. Subsurface disposal systems shall be placed no deeper than 36 inches below the surface.

5. Conventional subsurface disposal systems shall have a minimum 12 inches of soil backfill [Figure 1][Figure 2].

6. The minimum distance between absorption trench sidewalls shall be six feet.

7. Aggregate -type absorption trenches shall be a minimum of 24 inches and a maximum of 36 inches in width.

8. Trenches shall not be excavated when the soil is wet enough to smear or compact easily.

9. The bottom of the trenches or bed and the distribution lines shall have a grade from level to no greater than two inches fall per 100 feet.

10. There shall be a minimum of three feet of undisturbed soil between the excavation for the septic tank or treatment plant and the beginning of the absorption trench, bed or effluent line.

11. Media for the disposal fields shall extend from at least two inches above the top of the perforated field line pipe to at least six inches below the bottom of the perforated field line pipe a minimum of 12 inches total [Figure 1].

12. Stone media for the disposal fields shall consist of crushed rock, gravel or other suitable material, as approved by the Mississippi Department of Health, Division of Onsite Wastewater, varying in size from½ to 2½ inches. The material shall be free from dust, sand, clay, or excessive fines.

13. Tire chips shall be allowed for use as coarse aggregate in onsite wastewater treatment and disposal system drainfields and may substitute for stone aggregate on a one-for-one basis, volumetrically when the following physical properties are met:

    a. Tire chips are to be a normal two (2) inches in size and may range from one-half (1/2) inch to a maximum of four (4) inches in any direction.

    b. Exposed wire may protrude no more than one-half (1/2) inch from the sides of the chip. No more than (10%) by weight shall exceed this standard.

    c. No more than (10%) by weight shall pass through a one-half (1/2) inch screen.

    d. At least 80% of the bead wire must be removed from the tires to be chipped.

    e. Fines of less than 2 mm in size are prohibited. Fines in this context is defined as particles or substances which can settle to the bottom of the absorption trench and contribute to the clogging or blocking of infiltrative surfaces (dirt, dust, grit, crumb rubber and similar substances).

14. The media for the disposal fields shall be covered with untreated building paper, heavy craft paper, a layer of straw at least two inches thick, or other acceptable material, as approved by the Mississippi Department of Health, Division of Onsite Wastewater.

15. Soil material excavated from trenches shall be used in backfilling and should be left mounded over the trenches until initial settling has taken place.

16. When a change in elevation of the disposal trench is required, a connecting lateral or crossover must be used. At the point where a crossover line leaves a lateral, the trench for the crossover line shall be dug no deeper than the top of the

aggregate in the preceding trench so that an undisturbed block of earth will remain in place for the full depth of the aggregate. Crossover lines shall be laid on undisturbed earth. The invert of the crossover must be at least four inches lower than the invert of the septic tank effluent line.

17. Standard manufactured fittings compatible with the pipe shall be used to connect all pipes within the effluent disposal field.

SOURCE: Miss Code Ann. §41-67-3

Rule 5.4.6. **Certification:**

1. Any manufacturer wishing to provide tire chips for use in onsite sewage treatment and disposal system drainfields in the state of Mississippi must first receive a certification from the State Department of Health, Division of Onsite Wastewater. Manufacturers must provide proof they can produce a tire chip coarse aggregate in conformance with the standards in Section V, part 13.

2. Tire chip coarse aggregate from certified manufacturers shall be labeled as drainfield aggregate on the freight bill-of-lading. The bill-of-lading shall clearly certify that the material meets the requirement s for drainfield use. Contractors purchasing tire chip coarse aggregate shall retain a copy of the freight bill-of lading as documentation of the aggregate size and quality.

SOURCE: Miss Code Ann. §41-67-3

Rule 5.4.7. Alternating Disposal Fields

1. An alternating effluent disposal field system provides two complete disposal fields, separated by a valving system so that each system could alternately be used and rested. This "resting" has shown to be useful in regenerating the soil's capability for absorbing the effluent.

2. The size of each field can be from 50 to 100 percent of the required square footage of a single disposal field.

3. The length of time each field would be used and then rested will be determined on a case-by-case basis.

SOURCE: Miss Code Ann. §41-67-3

Rule 5.4.8. Shallow Disposal Fields: Shallow aggregate systems can sometimes be used where the depth to the restrictive horizon or water table is less than 25 inches. Placement of the system may be as shallow as 12 inches for aggregate systems [Figure 2 and Section IV part 14 and 15 of this design standard]. Shallow installations may be placed in any texture shown as suitable in Table II.

SOURCE: Miss Code Ann. §41-67-3

Rule 5.4.9. **Absorption Beds:**

1. Absorption beds and trenches should be located a minimum of 10 feet from any trees, except for subsurface drip irrigation.

2. Absorption beds have a smaller "footprint" than the same square footage of trench system. This lends them useful in certain installations where the amount of useable space is limited. [FIGURE 3].

3. The amount of bottom absorption area required shall be the same as shown in [TABLE II]. The bottom of the bed should have a relatively level grade.

4. Lines for distributing effluent shall be spaced from 3 to 6 feet apart and not greater than 3 feet from the sidewall. The number of lines will depend on the square feet and width of the bed to be constructed.

5. Care should be taken to prevent heavy machinery from damaging the bed during backfilling.

6. The effluent must be equally distributed to the bed by means of a distribution box or with a pipe manifold [FIGURE 4].

SOURCE: Miss Code Ann. §41-67-3

Rule 5.4.10. **Distribution of Effluent:**

1. When a change in elevation of the disposal trench is required, a distribution box, connecting lateral or crossover must be used. At the point where a crossover line leaves a lateral, the trench for the crossover line shall be dug no deeper than the top of the aggregate in the preceding trench so that an undisturbed block of earth will remain in place for the full depth of the aggregate. The distribution box shall be level and supply all lines equally. Field lines must be equal lengths when served by one distribution box.

2. Distribution boxes may be used to connect the effluent line to the effluent distribution lines. Non-perforated rigid pipe shall exit the distribution box for a minimum of five feet at level grade before the effluent distribution line (perforations) begins [FIGURE 7].

3. Crossover lines shall be laid on undisturbed earth. The invert of the crossover must be at least four inches lower than the invert of the septic tank outlet line.

    a. Crossovers shall be constructed as shown in FIGURE 5.

SOURCE: Miss Code Ann. §41-67-3

SETBACK REQUIREMENTS FROM SENSITIVE WATER
Minimum Distance from the Water Edge

Soil Textural Class	Slope of Less Than 8 Percent	Slope of More Than 8 Percent
Gravel	NOT APPLICABLE	
Coarse Sand	50 feet	50 feet
Medium Sand	50 feet	50 feet
Fine Sand	50 feet	50 feet
Loamy Sand	50 feet	50 feet
Sandy Loam	50 feet	50 feet
Light Loam	50 feet	50 feet
Heavy Loam	50 feet	50 feet
Silt Loam	50 feet	50 feet
Sandy Clay Loam	50 feet	50 feet
Light Clay Loam	50 feet	50 feet
Heavy Clay Loam	50 feet	50 feet
Light Silty Clay Loam	50 feet	50 feet
Heavy Silty Clay Loam	50 feet	50 feet
Sandy Clay	50 feet	50 feet
Silty Clay	50 feet	50 feet
Clay	50 feet	50 feet

The effluent disposal setback is based on the soil texture of the horizon in which the absorption trench or bed is to be placed. These setbacks are to be used on all individual on-site wastewater disposal systems except **spray irrigation disposal and overland discharge**.

Table II – **SIZING – AGGREGATE (Gravel, Crushed Stone, Tire Chips, or other approved media)**
Results of the Soil and Site Evaluation

Soil Textural Class	Ribbon Lengths (Inches)	EPA Manual Application Rate GPD/ Ft^2	Absorption Area Per Bedroom (3' Trench)		Additional Absorption Area Over 2 Persons Per Bedroom	
			Ft^2	Lf	Ft^2	Lf
Gravel	-	-	NOT SUITABLE			
Coarse Sand	-	1.2	108	36	54	18
Medium Sand	-	1.2	108	36	54	18
Fine Sand	-	0.8	163	54	81	27
Loamy Sand	-	0.8	163	54	81	27
Sandy Loam	<.5	0.6	217	72	108	36
Light Loam	<.5	0.6	217	72	108	36
Heavy Loam	.5 – 1	0.45	289	96	144	48
Silt Loam	<1	0.45	289	96	144	48
Sandy Clay Loam	1 – 2	0.45	289	96	144	48
Light Clay Loam	1 – 1.5	0.30	433	144	217	72
Heavy Clay Loam	1.5 – 2.0	0.20	650	217	325	108
Light Silty Clay Loam	1 – 1.5	0.30	433	144	217	72
Heavy Silty Clay Loam	1.5 – 2.0	0.20	650	217	325	108
Sandy Clay	>2.0	-	NOT SUITABLE			
Silty Clay	>2.0	-	NOT SUITABLE			
Clay	>2.0	-	NOT SUITABLE			

SOURCE: Miss Code Ann. §41-67-3

Figure I – Conventional Subsurface Absorption

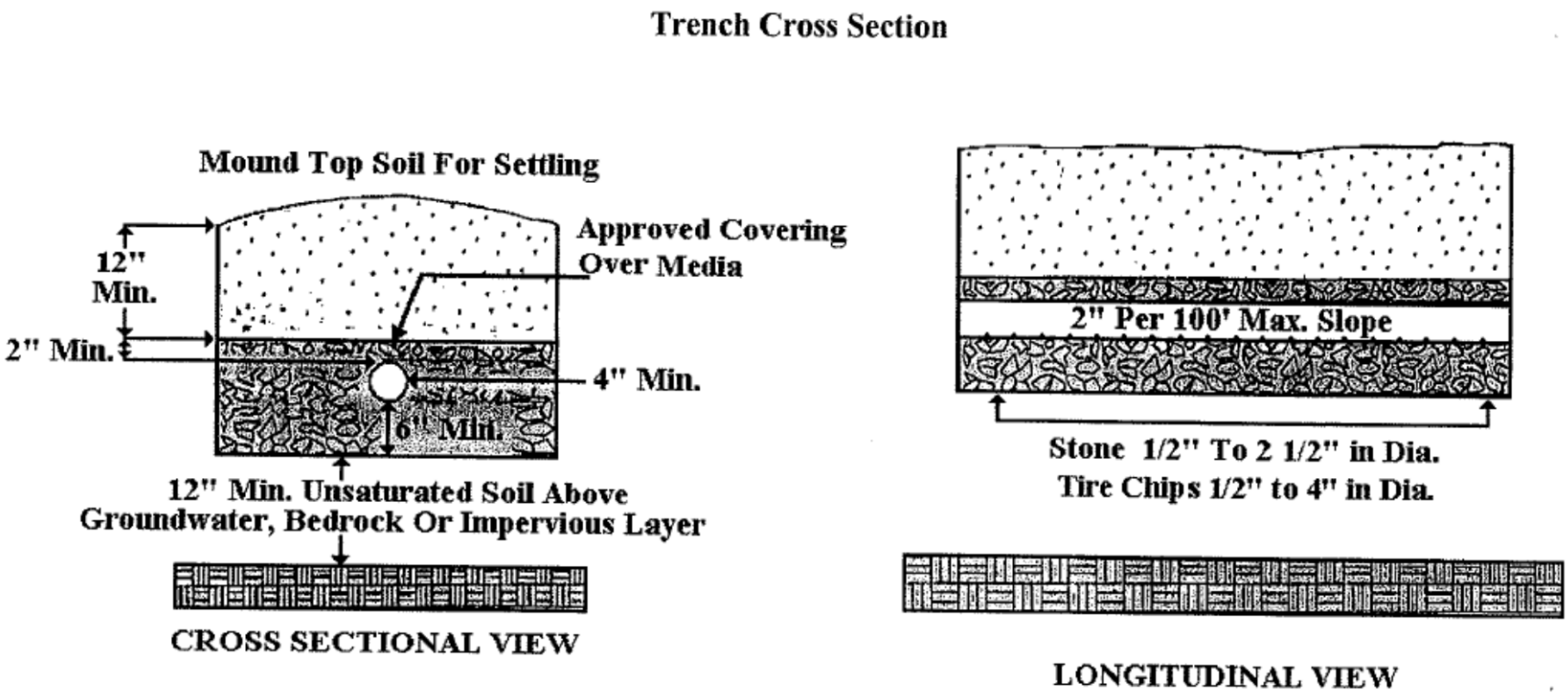

SOURCE: Miss Code Ann. §41-67-3

Figure II – Ultra Shallow Absorption Field

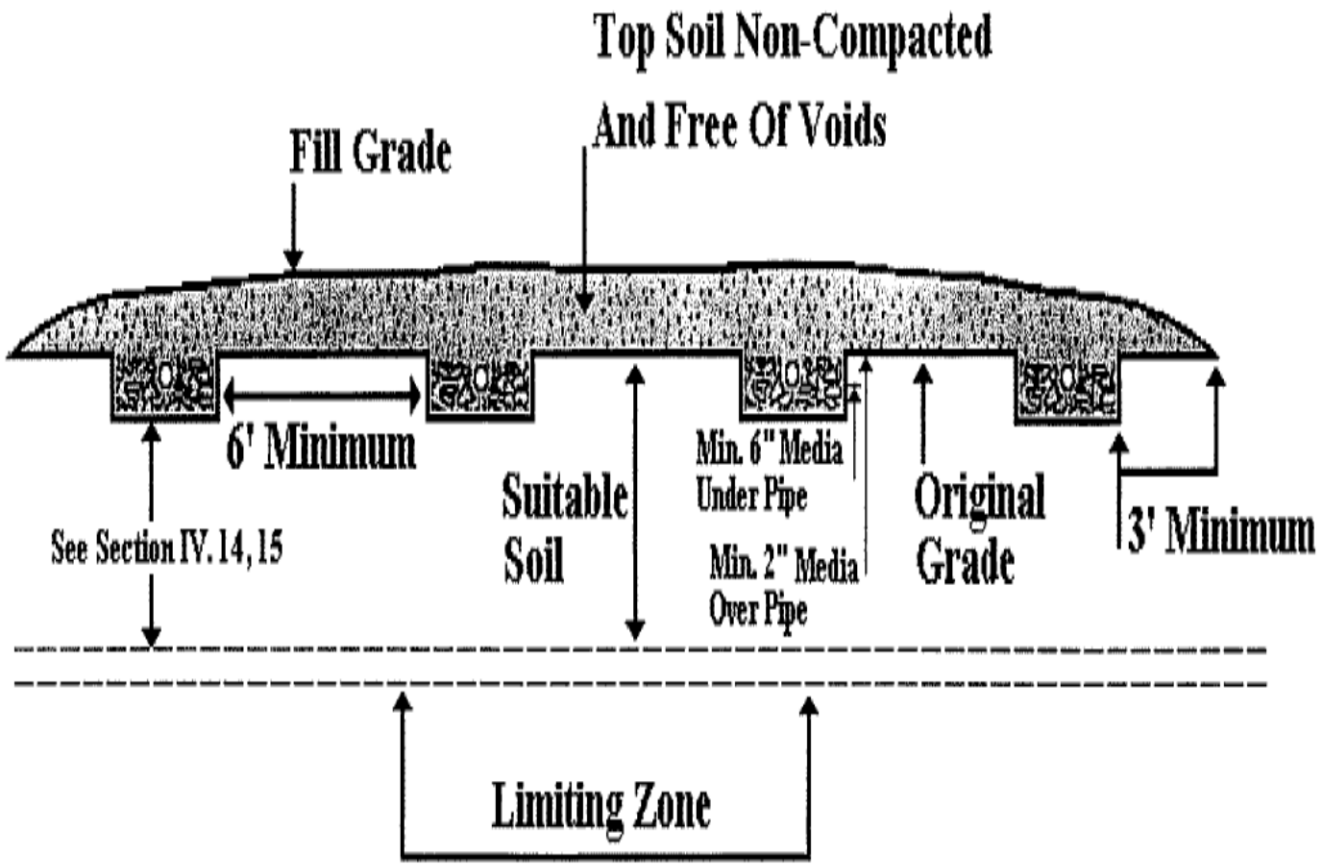

SOURCE: Miss Code Ann. §41-67-3

Figure III – Conventional Absorption Bed

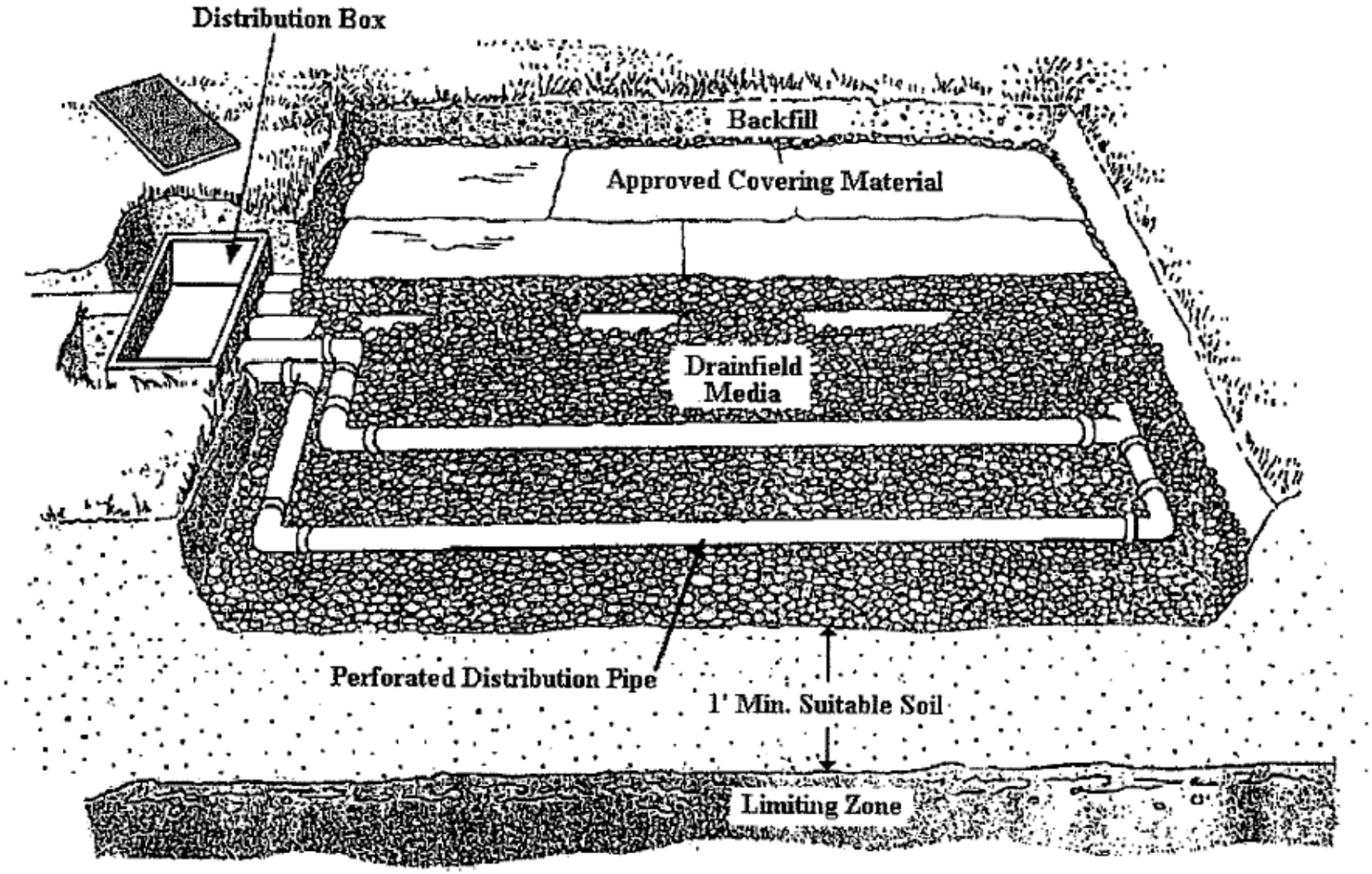

SOURCE: Miss Code Ann. §41-67-3

Figure IV – Effluent Distribution for Absorption Beds

Pipe Manifold Type
Drawing I

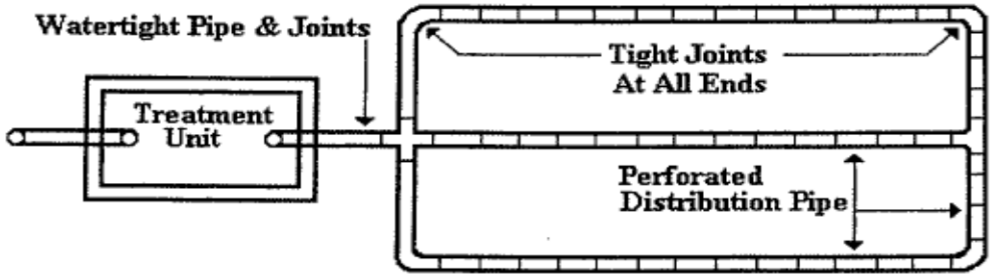

In absorption bed systems where the entire infiltrative surface is at one elevation closed loop networks may be used. The distribution pipe is laid level over the media filled excavation and the ends connected together with additional pipe with ell or tee fittings.

Distribution Box Type
Drawing II

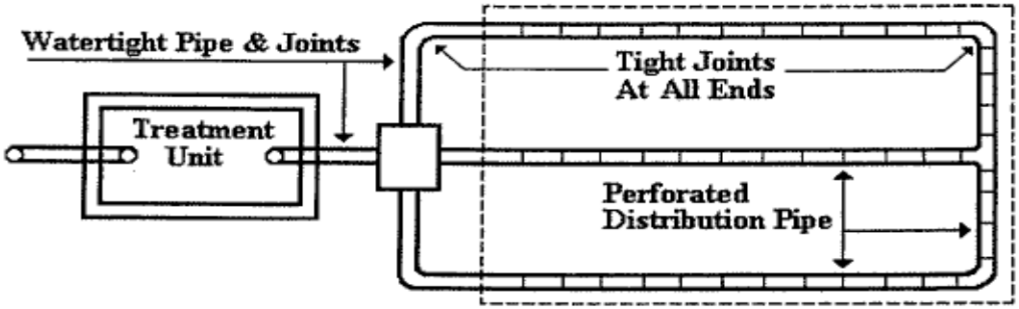

SOURCE: Miss Code Ann. §41-67-3

Figure V – Connection Lateral [Spill overs]

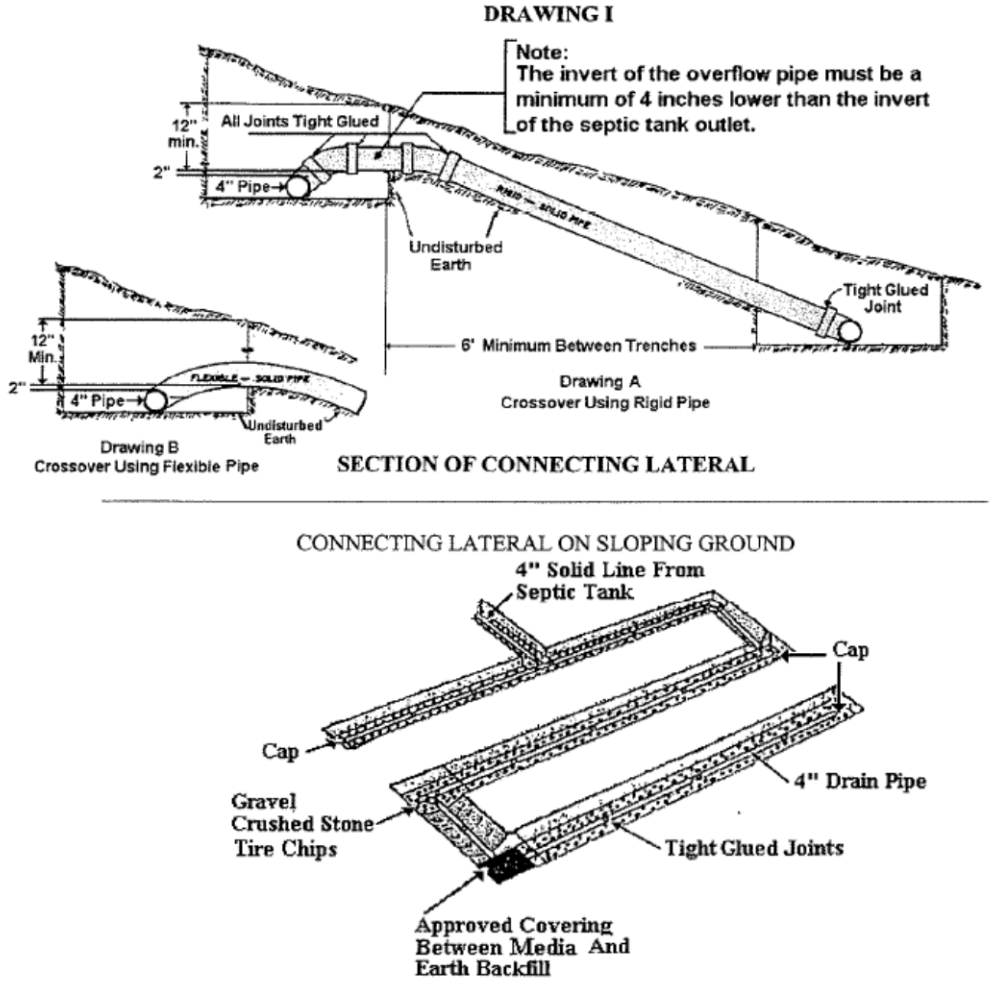

SOURCE: Miss Code Ann. §41-67-3

Figure VI – Conventional Absorption Bed

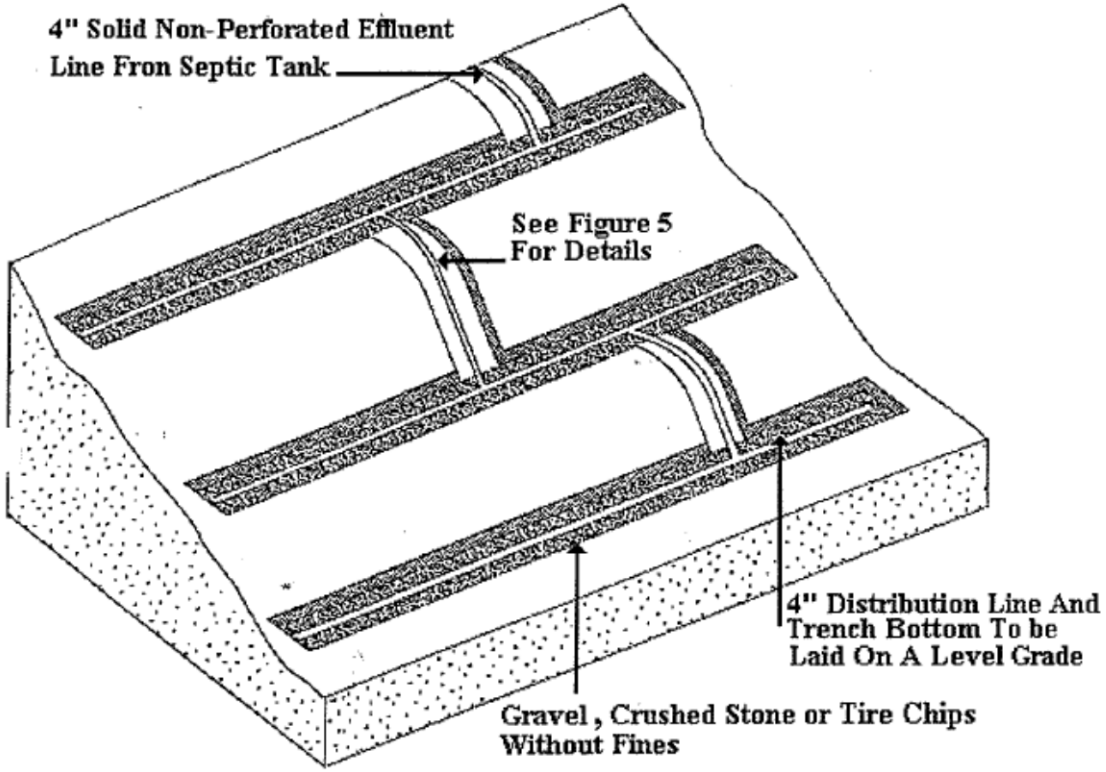

SOURCE: Miss Code Ann. §41-67-3

Figure VII – Distribution Box

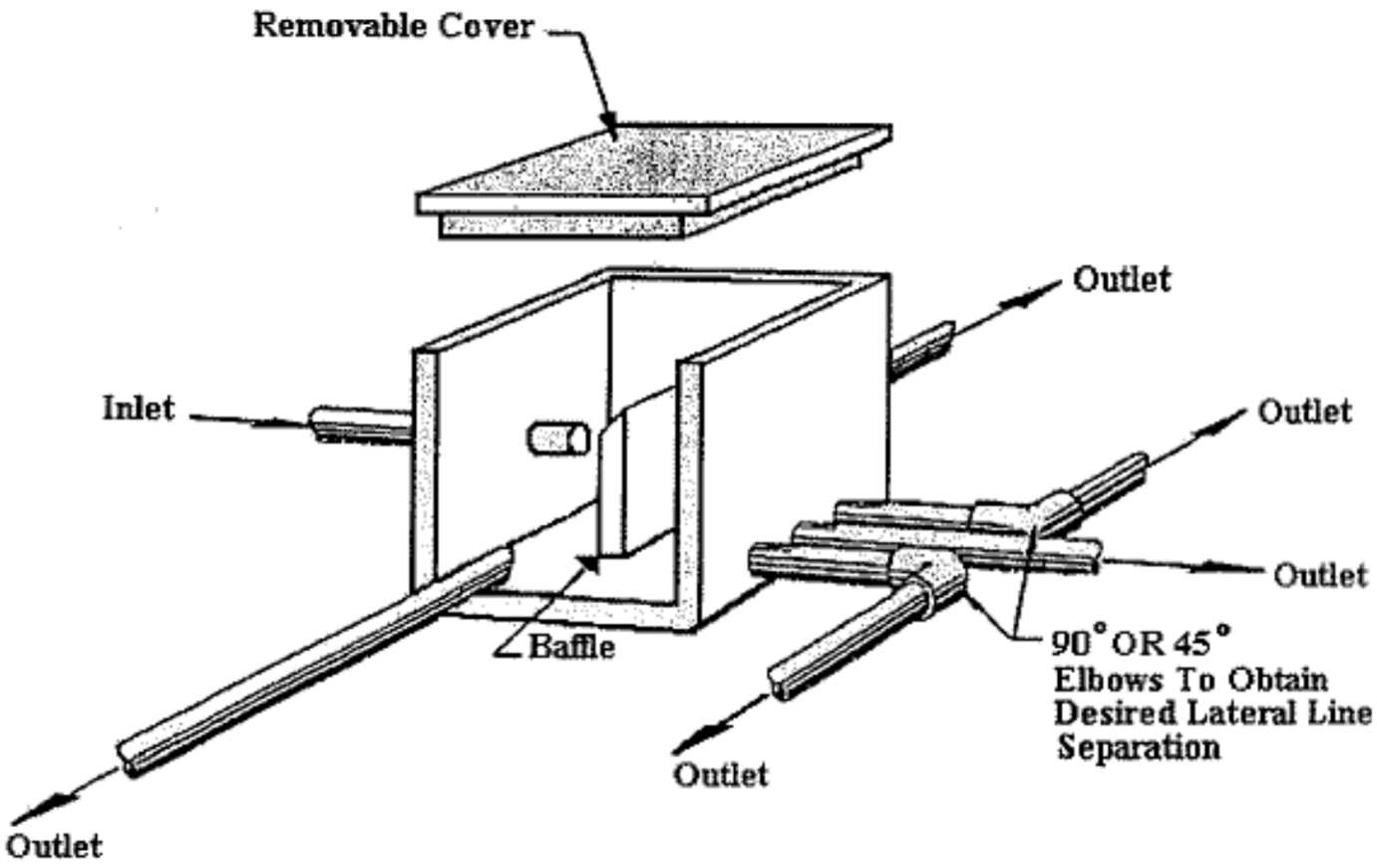

***SOURCE**: Miss Code Ann. §41-67-3*

Subchapter 5. AGGREGATE REPLACEMENT

Rule 5.5.1. In a conventional onsite wastewater system treatment begins in the septic tank, under anaerobic conditions. Final treatment and disposal takes place in the soil of the drain field, an aerobic environment. It is necessary for this aerobic condition to exist in the soil of the drain field for proper treatment of the effluent.

SOURCE: Miss Code Ann. §41-67-3

Rule 5.5.2. **Definitions:**

1. Chamber System - a system of bottomless molded plastic chambers installed in direct contact with the trench bottom to infiltrate primary treated effluent into the soil for final treatment and disposal.

2. Aggregate Replacement Disposal System - any normally gravity-fed subsurface disposal field utilizing an alternate media or technology to act as a replacement for the aggregate media. These system depths range from 36 to 6 inches in depth.

   a. Standard Subsurface Disposal 25 in. to 36 in.

   b. Shallow Subsurface Disposal 13 in. to 24 in.

   c. Ultra-shallow Subsurface Disposal 6 in. to 12 in.

3. Large Diameter Aggregate Replacement System - subsurface disposal system that utilizes large diameter pipe covered with a filtering material approved by the Mississippi State Department of Health for use in IOWDS systems.

4. Multi-Pipe Aggregate Replacement System - subsurface disposal system that utilizes a multiple arrangement of piping, approved by the Mississippi State Department of Health, to replace the aggregate media of conventional soil absorption systems for use in IOWDS systems.

5. Treatment - a process applied to wastewater which causes the resulting effluent to meet or exceed EPA secondary standards for treated wastewater for surface discharge and which does not endanger the public health.

SOURCE: Miss Code Ann. §41-67-3

Rule 5.5.3. **Site Evaluation:**

1. Information obtained during the soil and site evaluation will determine which type(s) of IOWDS may be utilized for an individual lot.

2. Prior to completing the Soil and Site Evaluation/System Recommendation, the Environmentalist shall visit the lot and conduct the soil and site evaluation.

3. The soil determinations will be made based on soil borings to a depth of five feet or to a depth sufficient to reach a restrictive horizon. Restrictive soil or site conditions may preclude the use of any subsurface disposal system.

4. A soil and site evaluation will be based on the following criteria:

    a. Absence of or protection from frequent flooding.

    b. Landscape position with good surface runoff.

    c. Slopes of less than 15%.

    d. Depth to high water table of greater than four feet.

    e. Depth to bedrock, fragipan or plinthite of greater than four feet.

    f. Soil texture and color defined by the Natural Resource Conservation Service as indicating good drainage and suitability for soil absorption, based on a soil boring of five feet.

    g. Available area in which to install an individual onsite wastewater disposal system meeting all requirements of this regulation. The area for repairs and future extensions shall be no less than 50% of the space required for the recommended system. Systems utilizing surface land application discharge are exempt from the 50% additional area requirement.

5. The non compliance of one or more of the above items may require a design alteration of an underground system.

SOURCE: Miss Code Ann. §41-67-3

Rule 5.5.4. **Location of Onsite Wastewater Disposal Systems**:

1. All components of the onsite wastewater disposal system shall be located a minimum of:

    a. five feet from any dwelling.

    b. ten feet from any property line.

2. Any vessel holding wastewater shall be located a minimum of 50 feet from any public, private or individual potable water source.

3. The effluent disposal field shall be located at a lower elevation or in a landscape position that will preclude any surface runoff from flowing in the direction of the well site and a minimum of 100 feet from any public, private or individual potable water source.

4. Potable water lines shall not pass under or through any part of the sewage disposal system. Where a water supply line must cross a sewer line, the bottom of the water service within ten feet of the point of crossing, shall be at least 12 inches above the top of the sewer line. The sewer line shall be of Schedule 40 pipe with cemented joints at least ten feet on either side of the crossing. Water and sewer lines shall not be laid in the same trench. The water and sewer lines, when laid on the same elevation, shall maintain a minimum separation distance of 10 feet.

5. The surface of or the surface above the disposal field shall not be used for vehicular traffic or vehicular parking.

6. No portion of an onsite wastewater disposal system shall be located under dwellings or other permanent structures.

7. Effluent disposal systems shall not be located in depressed areas where surface water will accumulate. Provision shall be made to minimize the flow of surface water over the effluent disposal field.

8. Subsurface wastewater disposal field setbacks from sensitive waters. [See Table I].

9. Slopes of greater than 30% shall not be considered for subsurface disposal installation.

10. Where all or part of the onsite wastewater disposal system is proposed to be installed on property other than the owner's, an easement in perpetuity shall be legally recorded in the proper county. The easement shall be of sufficient area to permit access, construction and maintenance of the onsite sewage disposal system.

11. No site for an effluent disposal field or expansion area shall be approved which is located wholly within an area which is frequently flooded, swamp, marsh, or wetland. Except that if permits have been issued by the proper regulatory agency authorizing the use of wetlands for building sites, the property shall be evaluated using standard soil and site criteria for IOWDS.

12. When a proposed lot is located partially within a frequently flooded area, that portion of said lot not within the flood prone area may be considered for approval for the effluent disposal field.

13. There shall be maintained a minimum of 12 inches of unsaturated soil between the bottom of the subsurface disposal system and a perched or seasonal water table in soils that contain a restrictive horizon (fragipan, chalk, bedrock, clay or silty clay) within five feet of the surface.

14. There shall be maintained a minimum of 24 inches of unsaturated soil between the bottom of the subsurface disposal system and any perched or seasonal water table in soils that do not contain a restrictive horizon (fragipan, chalk, bedrock, clay or silty clay) within five feet of the surface.

15. Easements or right-of-way areas for utilities, surface or subsurface drainage, roads, streets, ponds or lakes shall not be used as available space for location of individual onsite sewage disposal systems.

SOURCE: Miss Code Ann. §41-67-3

Rule 5.5.5. **Underground Absorption:**

1. Aggregate replacement systems shall comply with all criteria for subsurface gravel disposal systems except in sections pertaining to the gravel media or as specified in this regulation.

2. The size of the subsurface sewage disposal system shall be determined by soil texture and estimated wastewater flow.

3. Soils with excessively rapid permeability rates, gravel and coarse sand, shall be considered unsuitable for subsurface disposal unless the native soil is replaced with a suitably thick (greater than two feet) layer of loamy sand or sand textured soil.

4. Soils with excessively slow permeability rates, silty clay and clay, shall be considered unsuitable for conventional subsurface disposal.

5. Subsurface disposal systems shall be placed no deeper than 36 inches below the surface.

6. Aggregate replacement subsurface disposal systems shall have a minimum 12 inches of soil backfill.

7. The minimum distance between absorption trench sidewalls shall be six feet.

8. Trenches shall not be excavated when the soil is wet enough to smear or compact easily.

9. There shall be a minimum of three feet of undisturbed soil between the excavation for the septic tank or treatment plant and the beginning of the absorption trench, bed or effluent line.

10. The bottom of the outlet of the septic tank, aerobic treatment plant or vessel supplying effluent to the pipe must be a minimum of one inch above the top of the aggregate replacement system.

11. Care must be taken when backfilling to prevent the pipe from shifting during the backfilling process.

12. Soil material excavated from trenches shall be used in backfilling and should be left mounded over the trenches until initial settling has taken place.

13. Standard manufactured fittings compatible with the pipe shall be used to connect all pipes within the effluent disposal field.

SOURCE: Miss Code Ann. §41-67-3

Rule 5.5.6. **Alternating Disposal Fields:**

1. An alternating effluent disposal field system provides two complete disposal fields, separated by a valving system so that each system could alternately be used and rested. This "resting" has shown to be useful in regenerating the soil's capability for absorbing the effluent.

2. The size of each field can be from 50 to 100 percent of the required square footage of a single disposal field.

3. The length of time each field would be used and then rested will be determined on a case-by-case basis.

SOURCE: Miss Code Ann. §41-67-3

Rule 5.5.7. Shallow and Ultra-shallow Disposal Fields: Shallow or ultra-shallow systems can sometimes be used where the depth to the restrictive horizon or water table is less than the minimum required. Placement of the system may be as shallow as 6 inches for large diameter double-six aggregate replacement pipe systems. Ultra-shallow installations shall be restricted to soil textures of loam or lighter. Shallow installations may be placed in any texture shown as suitable in the system specific sizing tables.

SOURCE: Miss Code Ann. §41-67-3

Rule 5.5.8. Sizing: The large diameter aggregate replacement systems shall be sized in accordance with the following tables.

SOURCE: Miss Code Ann. §41-67-3

Rule 5.5.9. **Construction:**

1. Large diameter aggregate replacement absorption trenches shall be a minimum of 24 inches and a maximum of 36 inches in width.

2. The bottom of the trenches or bed and the distribution lines shall have a grade from level to no greater than two inches fall per 100 feet for double six inch large diameter aggregate replacement pipe and one inch fall per 100 feet for eight and ten inch large diameter aggregate replacement pipe.

3. Overlap filter wrap at coupling joints and seal using factory approved methods.

4. The 4" pipe from the septic tank, aerobic treatment plant or vessel supplying effluent to the aggregate replacement pipe shall be installed into an offset connector particular to the type and manufacturer of the pipe. These connectors will also be used when crossovers are constructed to change elevations of field system.

5. Fabric must be pulled over offset connector and sealed using a factory approved method.

6. The ends of the large diameter aggregate replacement pipe shall be closed with an end cap particular to the type and manufacturer of the pipe.

7. Care must be taken during backfilling to prevent the aggregate replacement pipe from “crawling” when backfill is applied.

SOURCE: Miss Code Ann. §41-67-3

Rule 5.5.10. **Distribution of Effluent:**

1. Aggregate Replacement Pipe Systems

   a. When a change in elevation of the disposal trench is required, a distribution box, connecting lateral or crossover must be used. At the point where a crossover line leaves a lateral, the trench for the crossover line shall be dug no deeper than the top of the Aggregate replacement pipe in the preceding trench so that an undisturbed block of earth will remain in place for the full depth of the aggregate replacement pipe. The distribution box shall be level and supply all lines equally. Field lines must be equal lengths when served by one distribution box.

   b. Distribution boxes may be used to connect the effluent line to the effluent distribution lines. Non-perforated rigid pipe shall exit the distribution box for a minimum of five feet at level grade before the effluent distribution line (perforations) begins.

c. Crossover lines shall be laid on undisturbed earth. The invert of the crossover must be at least four inches lower than the invert of the septic tank outlet line. Crossovers shall be constructed as shown in Figure 1.

SOURCE: Miss Code Ann. §41-67-3

Rule 5.5.11. **Absorption Beds**: Absorption beds may be constructed using large diameter aggregate replacement filter wrap pipe.

1. Absorption beds and trenches should be located a minimum of 10 feet from any trees.

2. The amount of linear footage required shall be the same as for trench configurations. The bottom of the bed should have a relatively level grade; the grade within the bed shall not exceed the grade allowed for trench installations.

3. Lines for distributing effluent shall be spaced from 3 to 6 feet apart with the first and last pipe placed next to the sidewall of the bed. The number of lines will depend on the lineal feet of aggregate replacement line (Table II & III) and width of the bed to be constructed.

4. Care should be taken to prevent heavy machinery from damaging the bed during backfilling.

5. The effluent must be equally distributed to the bed by means of a distribution box or with a pipe manifold.

6. When a change in elevation of the disposal trench is required, a connecting lateral or crossover must be used. At the point where a crossover line leaves a lateral, the trench for the crossover line shall be dug no deeper than the top of the aggregate replacement pipe in the preceding trench so that an undisturbed block of earth will remain in place for the full depth of the pipe. Crossover lines shall be laid on undisturbed earth. The invert of the crossover must be at least four inches lower than the invert effluent line of the septic tank, aerobic treatment plant or vessel supplying effluent to the pipe [Figure 1].

SOURCE: Miss Code Ann. §41-67-3

Rule 5.5.12. **Multi-Pipe Aggregate Replacement Systems:**

1. General: The multi-pipe aggregate replacement system is a system that utilizing bundles of four inch perforated pipe to provide a void space. The top pipe in one bundle of this system receives the treated effluent for distribution throughout the disposal system. All multi-pipe aggregate

replacement systems must be installed by a Certified Installer that is factory-trained and authorized by the manufacturer.

2. Sizing: The multi-pipe aggregate replacement systems shall be sized in accordance with the TABLE IV.

3. Construction

   a. The bottom of the trenches and the distribution lines shall have a grade from level to no greater than two inches fall per 100 feet for multi-pipe aggregate replacement systems.

   b. Multi-pipe aggregate replacement system trenches shall be a minimum of 24 and a maximum of 36 inches in width.

   c. The multi-pipe aggregate replacement system must be installed with effluent being distributed to each trench distribution pipe by use of a distribution box or a level pipe header.

      i. When a change in elevation of the disposal trench is required, a distribution box or approved crossover shall be used. The distribution box, if used, shall be level and supply all lines equally.

      ii. Distribution boxes may be used to connect the effluent line to the effluent distribution lines. Non-perforated rigid pipe shall exit the distribution box for a minimum of five feet at level grade before the effluent distribution line (perforations) begins.

   d. The system shall be covered with a manufacturer-approved, geotextile cloth before backfilling.

   e. The geotextile cloth shall cover the open ends of the void and distribution pipes at their termination at the ends of the trench.

SOURCE: Miss Code Ann. §41-67-3

Rule 5.5.13. When a change in elevation of the disposal trench is required, an additional distribution box or connecting lateral/crossover must be used. At the point where a crossover line leaves a lateral, the trench for the crossover line shall be dug no deeper than the top of the multi-pipe aggregate replacement distribution pipe in the preceding trench so that an undisturbed block of earth will remain in place for the full depth of the distribution system. Crossover lines shall be laid on undisturbed earth. The invert of the crossover must be at least four inches lower than the invert effluent line of the septic tank, aerobic treatment plant or vessel supplying effluent to the pipe.

SOURCE: Miss Code Ann. §41-67-3

Rule 5.5.14. **Absorption Bed [Multi-pipe System]**

1. Multi-pipe systems installed in a bed configuration shall have the same lineal foot requirements as indicated for their respective trench configurations. The length and width of the bed to be constructed will be determined by the number of multi-pipe systems wide and the length selected to comply with the lineal footage required under Table IV.

2. The multi-pipe system shall be placed side by side in the bed. Any side by side placement of multi-pipe systems shall constitute a bed.

3. The bottom of the bed should have a relatively level grade, from the end and side to side. The grade within the bed shall not exceed the grade allowed for trench installations.

4. The effluent must be equally distributed to the bed by means of a distribution box or with a pipe manifold.

5. The multi-pipe system may be cut in-order to accommodate setbacks. The multi-pipe system shall be cut to a length which preserves the integrity of the banded void pipes and provides adequate banding of the system a minimum of every 18 inches to a maximum of every 20 inches. Manufactured couplers shall be used to join cut ends of the void pipes.

6. The system shall be covered with a manufacturer-approved geotextile cloth before backfilling.

7. The geotextile cloth shall cover the open ends of the void pipes.

8. Care should be taken to prevent heavy machinery from damaging the bed during backfilling.

SOURCE: Miss Code Ann. §41-67-3

Rule 5.5.15. **Expanded Polystyrene (EPS) Aggregate Systems**

1. General: The EPS Aggregate system utilizes bundles of expanded polystyrene aggregate to replace rock aggregate in a subsurface disposal system. Effluent is distributed via a 4 inch perforated pipe incorporated into the center of one EPS bundle. System configurations of multiple bundles will incorporate one bundle run containing the 4 inch perforated pipe in conjunction with bundles containing only EPS aggregate. This 4 inch perforated pipe receives the treated effluent for distribution throughout the trench. The expanded polystyrene aggregate must be contained in a material that is resistant to the effects of wastewater, will prevent the loss of aggregate from the container and strong enough to

retain the shape of the bundles during system installation and backfilling. All EPS Aggregate Systems must be installed by a factory-trained installer that is an authorized representative of the manufacturer.

2. Construction

   a. The EPS Aggregate System absorption trenches shall be a minimum of 24 inches and a maximum of 36 inches in width.

   b. The bottom of the trenches and the distribution lines shall have a grade from level to no greater than two inches fall per 100 feet.

   c. The grade shall be measured from the trench bottom and not the effluent distribution line encased in the EPS bundle.

   d. The EPS Aggregate system shall be covered with an approved cover material before backfilling. Covering material shall consist of craft paper or other bio-degradable product approved and/or supplied by the manufacturer.

3. Distribution of Effluent [EPS Aggregate System]

   a. When a change in elevation of the disposal trench is required, a distribution box, connecting lateral or crossover must be used. At the point where a crossover line leaves a lateral, the trench for the crossover line shall be dug no deeper than the top of the distribution pipe in the preceding trench so that an undisturbed block of earth will remain in place for the full depth of the system [Figure 2]. The invert of the crossover must be at least four inches lower than the invert of the septic tank outlet line.

   b. Distribution boxes may be used to connect the effluent line to the effluent distribution lines. The distribution box shall be level and supply all lines equally. Field lines must be equal lengths when served by one distribution box. Non-perforated rigid pipe shall exit the distribution box for a minimum of five feet at level grade before the effluent distribution line (perforations) begins.

4. Absorption Beds [EPS Aggregate Systems]: Absorption beds may be constructed using the EPS Aggregate system.

   a. Absorption beds and trenches should be located a minimum of 10 feet from any trees.

   b. The amount of linear footage required for EPS horizontal systems shall be the same as for trench configurations [Table V]. The bottom of the bed should have a relatively level grade; the grade within the bed shall not exceed the grade allowed for EPS trench

installations. EPS triangular systems shall not be used in bed configurations.

c. The EPS bundles shall be placed side by side in the bed. The number of bundles will depend on the lineal footage required and the width of the bed to be constructed.

d. Care should be taken to prevent heavy machinery from damaging the bed during backfilling.

e. The effluent must be equally distributed to the bed by means of a distribution box or with a pipe manifold.

5. Sizing

a. EPS Aggregate systems shall be sized in accordance Table

SOURCE: Miss Code Ann. §41-67-3

Rule 5.5.16. **Chamber Subsurface Disposal Systems:**

1. General: Chamber systems utilize molded plastic bottomless chambers which are installed in a drain field excavation with the open bottom of the chamber in direct contact with the trench bottom. The chambers are linked together in such a manner as to completely cover the excavation with adjacent chambers in contact with each other. Effluent is introduced into the chambers and is absorbed into the soil for final treatment and disposal. All chamber systems must be installed by a factory trained and authorized installer.

2. Chamber Class Designation

a. Each model of chamber will be assigned a class designation based on the bottom square footage of the chamber section. This square footage will be derived by a multiple of the outside width and the useable length of the chamber section.

b. Chamber models will be assigned a class designation according to Table VII.

SOURCE: Miss Code Ann. §41-67-3

Rule 5.5.17. **Construction:**

1. The chamber system absorption trenches shall be a minimum of 18 inches and a maximum of 36 inches in width.

2. The bottom of the trenches shall have a grade from level to no greater than two (2) inches fall per 100 feet.

3. The grade shall be measured from the trench bottom and not the chamber top.

4. The chamber system shall be covered as per the manufacturer's specifications. In all cases there shall be a minimum of 12 inches of soil cover over the chamber system.

5. The minimum height of a chamber, at its centerline, shall be 8 inches.

6. The last chamber in each "run" shall be terminated with an end plate.

SOURCE: Miss Code Ann. §41-67-3

Rule 5.5.18. **Distribution of Effluent [Chamber Systems]**

1. When a change in elevation of the chamber system is required, a distribution box, connecting lateral or crossover must be used. At the point where a crossover line leaves a lateral, the trench for the crossover line shall be dug no deeper than the top of the endplate inlet or the inlet in the top of the chamber in the preceding trench so that an undisturbed block of earth will remain in place for the full depth of the system. The invert of the crossover must be at least four inches lower than the invert of the septic tank outlet line.

2. Distribution boxes may be used to connect the effluent line to the effluent distribution lines. The distribution box shall be level and supply all lines equally. Field lines (chambers) must be equal lengths when served by one distribution box. Non-perforated rigid pipe shall exit the distribution box for a minimum of five feet at level grade before the effluent distribution line begins.

SOURCE: Miss Code Ann. §41-67-3

Rule 5.5.19. **Sizing of the Chamber System:**

1. Chamber systems installed in a trench configuration shall be sized in accordance with Table VIII.

2. Chamber systems installed in a bed configuration shall have the same number of chamber sections as indicated for a trench system. The length and width of the bed to be constructed will depend on the number of chamber sections to be installed as indicated by Table VIII. Any side-by-side placement of chambers shall constitute a bed.

a. Absorption beds and trenches should be located a minimum of 10 feet from any trees.

b. The bottom of the bed should have a relatively level grade; the grade within the bed shall not exceed the grade allowed for trench installations.

c. The chambers shall be placed side by side in a bed with separation between each chamber row per individual manufacturer's requirements.

d. Care should be taken to prevent heavy machinery from damaging the bed during backfilling.

e. The effluent must be equally distributed to the bed by means of a distribution box or with a pipe manifold.

SOURCE: Miss Code Ann. §41-67-3

SETBACK REQUIREMENTS FROM SENSITIVE WATER
Minimum Distance from the Water Edge

Soil Textural Class	Slope of Less Than 8 Percent	Slope of More Than 8 Percent
Gravel	NOT APPLICABLE	
Coarse Sand	50 feet	50 feet
Medium Sand	50 feet	50 feet
Fine Sand	50 feet	50 feet
Loamy Sand	50 feet	50 feet
Sandy Loam	50 feet	50 feet
Light Loam	50 feet	50 feet
Heavy Loam	50 feet	50 feet
Silt Loam	50 feet	50 feet
Sandy Clay Loam	50 feet	50 feet
Light Clay Loam	50 feet	50 feet
Heavy Clay Loam	50 feet	50 feet
Light Silty Clay Loam	50 feet	50 feet
Heavy Silty Clay Loam	50 feet	50 feet
Sandy Clay	50 feet	50 feet
Silty Clay	50 feet	50 feet
Clay	50 feet	50 feet

The effluent disposal setback is based on the soil texture of the horizon in which the absorption trench or bed is to be placed. These setbacks are to be used on all individual on-site wastewater disposal systems except **spray irrigation disposal and overland discharge**.

SIZING – AGGREGATE REPLACEMENT (Large Diameter Pipe)

Results of the Soil and Site Evaluation

Soil Textural Class	Ribbon Lengths (Inches)	EPA Manual Application Rate GPD/ Ft^2	Absorption Area Per Bedroom**						Additional Absorption Area Over 2 Persons Per Bedroom**					
			Ft^2			*Lf			Ft^2			*Lf		
			6	8	10	6	8	10	6	8	10	6	8	10
Gravel	-	-	NOT SUITABLE											
Coarse Sand	-	1.2	164	164	108	55	55	36	82	82	54	27	27	18
Medium Sand	-	1.2	164	164	108	55	55	36	82	82	54	27	27	18
Fine Sand	-	0.8	247	247	165	82	82	55	124	124	82	41	41	27
Loamy Sand	-	0.8	247	247	165	82	82	55	124	124	82	41	41	27
Sandy Loam	<.5	0.6	325	325	217	108	108	72	163	163	108	54	54	36
Light Loam	<.5	0.6	325	325	217	108	108	72	163	163	108	54	54	36
Heavy Loam	.5 – 1	0.45	437	437	290	146	146	97	218	218	145	73	73	48
Silt Loam	<1	0.45	437	437	290	146	146	97	218	218	145	73	73	48
Sandy Clay Loam	1 – 2	0.45	437	437	290	146	146	97	218	218	145	73	73	48
Light Clay Loam	1 – 1.5	0.30	650	650	433	217	217	144	325	325	217	108	108	72
Heavy Clay Loam	1.5 – 2.0	0.20	975	975	650	325	325	217	488	488	325	163	163	108
Light Silty Clay Loam	1 – 1.5	0.30	650	650	433	217	217	144	325	325	217	108	108	72
Heavy Silty Clay Loam	1.5 – 2.0	0.20	975	975	650	325	325	217	488	488	325	163	163	108
Sandy Clay	>2.0	-	NOT SUITABLE											
Silty Clay	>2.0	-	NOT SUITABLE											
Clay	>2.0	-	NOT SUITABLE											

Minimum and maximum trench widths are 24 and 36 inches, respectively.
*Linear footages assume 24 inch trench width.
** Bedroom is equivalent to 130 gallons per day.

SOURCE: Miss Code Ann. §41-67-3

SIZING – AGGREGATE REPLACEMENT (Multi-Pipe System)

Results of the Soil and Site Evaluation

Soil Textural Class	Ribbon Lengths (Inches)	EPA Manual Application Rate GPD/ Ft^2	Absorption Area Per Bedroom**					Additional Absorption Over 2 Person Per Bedroom**				
			MPS -14 & 36XX***		MPS-13	MPS-11	MPS-9	MPS-14 & 36XX***		MPS-13	MPS-11	MPS-9
			Ft^2	Lf	Lf	Lf	Lf	Ft^2	Lf	Lf	Lf	Lf
Gravel	-	-	NOT SUITABLE									
Coarse Sand	-	1.2	108	36	28	32	38	54	18	14	16	19
Medium Sand	-	1.2	108	36	28	32	38	54	18	14	16	19
Fine Sand	-	0.8	163	54	42	49	58	81	27	21	24	29
Loamy Sand	-	0.8	163	54	42	49	58	81	27	21	24	29
Sandy Loam	<.5	0.6	217	72	55	64	76	108	36	28	32	38
Light Loam	<.5	0.6	217	72	55	64	76	108	36	28	32	38
Heavy Loam	.5 – 1	0.45	289	96	74	86	102	144	48	37	43	51
Silt Loam	<1	0.45	289	96	74	86	102	144	48	37	43	51
Sandy Clay Loam	1 – 2	0.45	289	96	74	86	102	144	48	37	43	51
Light Clay Loam	1 – 1.5	0.30	433	144	110	128	171	217	72	55	64	77
Heavy Clay Loam	1.5 – 2.0	0.20	650	217	165	193	230	325	108	82	97	115
Light Silty Clay Loam	1 – 1.5	0.30	433	144	110	128	171	217	72	55	64	77
Heavy Silty Clay Loam	1.5 – 2.0	0.20	650	217	165	193	230	325	108	82	97	115
Sandy Clay	>2.0	-	NOT SUITABLE									
Silty Clay	>2.0	-	NOT SUITABLE									
Clay	>2.0	-	NOT SUITABLE									

Minimum and maximum trench widths are 24 and 36 inches, respectively.
** Bedroom is equivalent to 130 gallons per day.
***XX represents either 9, 11, or 14 pipes.

SOURCE: Miss Code Ann. §41-67-3

SIZING – AGGREGATE REPLACEMENT (Expanded Polystyrene System) "Horizontal" Configuration

Results of the Soil and Site Evaluation

Soil Textural Class	Ribbon Lengths (Inches)	EPA Manual Application Rate GPD/ Ft^2	Absorption Area Per Bedroom**							Additional Absorption Over 2 Person Per Bedroom**						
			3-8	4-9	3-10H		1-12	2-12	3-12	3-8	4-9	3-10H		1-12	2-12	3-12
			Lf	Lf	Ft^2	Lf	Lf	Lf	Lf	Lf	Lf	Ft^2	Lf	Lf	Lf	Lf
Gravel	-	-	NOT SUITABLE													
Coarse Sand	-	1.2	42	27	108	30	75	37	25	21	14	54	15	38	19	13
Medium Sand	-	1.2	42	27	108	30	75	37	25	21	14	54	15	38	19	13
Fine Sand	-	0.8	63	41	163	46	114	57	38	32	21	81	23	57	29	19
Loamy Sand	-	0.8	63	41	163	46	114	57	38	32	21	81	23	57	29	19
Sandy Loam	<.5	0.6	83	54	217	60	151	75	50	42	27	108	30	76	38	25
Light Loam	<.5	0.6	83	54	217	60	151	75	50	42	27	108	30	76	38	25
Heavy Loam	.5 – 1	0.45	112	73	289	81	201	101	67	56	37	144	40	101	52	33
Silt Loam	<1	0.45	112	73	289	81	201	101	67	56	37	144	40	101	52	33
Sandy Clay Loam	1 – 2	0.45	112	73	289	81	201	101	67	56	37	144	40	101	52	33
Light Clay Loam	1 – 1.5	0.30	167	109	433	120	299	153	100	84	55	217	60	100	77	50
Heavy Clay Loam	1.5 – 2.0	0.20	250	163	650	178	449	225	150	125	82	325	89	225	113	75
Light Silty Clay Loam	1 – 1.5	0.30	167	109	433	120	299	153	100	84	55	217	60	100	77	50
Heavy Silty Clay Loam	1.5 – 2.0	0.20	250	163	650	178	449	225	150	125	82	325	89	225	113	75
Sandy Clay	>2.0	-	NOT SUITABLE													
Silty Clay	>2.0	-	NOT SUITABLE													
Clay	>2.0	-	NOT SUITABLE													

Minimum and maximum trench widths are 24 and 36 inches, respectively.
** Bedroom is equivalent to 150 gallons per day.

SOURCE: Miss Code Ann. §41-67-3

SIZING – AGGREGATE REPLACEMENT (Expanded Polystyrene System) "Triangular" Configuration

Results of the Soil and Site Evaluation

Soil Textural Class	Ribbon Lengths (Inches)	EPA Manual Application Rate GPD/ Ft^2	Absorption Area Per Bedroom**		Additional Absorption Over 2 Person Per Bedroom**	
			3-10 Inch		3-10 Inch	
			Ft^2	Lf	Ft^2	Lf
Gravel	-	-	NOT SUITABLE			
Coarse Sand	-	1.2	54	27	26	13
Medium Sand	-	1.2	54	27	26	13
Fine Sand	-	0.8	83	42	42	21
Loamy Sand	-	0.8	83	42	42	21
Sandy Loam	<.5	0.6	109	55	55	28
Light Loam	<.5	0.6	109	55	55	28
Heavy Loam	.5 – 1	0.45	146	73	73	36
Silt Loam	<1	0.45	146	73	73	36
Sandy Clay Loam	1 – 2	0.45	146	73	73	36
Light Clay Loam	1 – 1.5	0.30	217	108	109	55
Heavy Clay Loam	1.5 – 2.0	0.20	326	163	163	81
Light Silty Clay Loam	1 – 1.5	0.30	217	108	109	55
Heavy Silty Clay Loam	1.5 – 2.0	0.20	326	163	163	81
Sandy Clay	>2.0	-	NOT SUITABLE			
Silty Clay	>2.0	-	NOT SUITABLE			
Clay	>2.0	-	NOT SUITABLE			

Minimum and maximum trench widths are 24 and 36 inches, respectively. The **Triangular Configuration** can only be installed in a trench.

** Bedroom is equivalent to 150 gallons per day.

SOURCE: Miss Code Ann. §41-67-3

CHAMBER SYSTEM

Classification

CLASS	SQUARE FEET/CHAMBER SECTION
I	7.51 – 9.50
II	9.51 – 11.50
III	11.51 – 13.50
IV	13.51 – 15.50
V	15.51 – 17.50
VI	17.51 – 19.50
VII	19.51 – 21.50
VIII	21.51 – 23.50

SOURCE: Miss Code Ann. §41-67-3

SIZING – AGGREGATE REPLACEMENT (Chamber System)

Results of the Soil and Site Evaluation

Soil Textural Class	Ribbon Lengths (Inches)	EPA Manual Application Rate GPD/ Ft^2	Absorption Area in Ft^2 Per Bedroom**	Number of Pieces Per Bedroom based on Chamber Class**				Additional Pieces Over 2 Persons Per Bedroom Based on Chamber Class**			
				I	II	III	IV	I	II	III	IV
Gravel	-	-	NOT SUITABLE								
Coarse Sand	-	1.2	76	9	7	6	5	5	4	3	3
Medium Sand	-	1.2	76	9	7	6	5	5	4	3	3
Fine Sand	-	0.8	115	13	11	10	8	7	6	5	4
Loamy Sand	-	0.8	115	13	11	10	8	7	6	5	4
Sandy Loam	<.5	0.6	152	17	15	12	10	9	8	6	5
Light Loam	<.5	0.6	152	17	15	12	10	9	8	6	5
Heavy Loam	.5 – 1	0.45	204	23	19	16	14	9	8	6	5
Silt Loam	<1	0.45	204	23	19	16	14	12	10	8	7
Sandy Clay Loam	1 – 2	0.45	204	23	19	16	14	12	10	8	7
Light Clay Loam	1 – 1.5	0.30	303	33	28	24	21	17	14	12	11
Heavy Clay Loam	1.5 – 2.0	0.20	455	50	43	34	30	25	22	17	15
Light Silty Clay Loam	1 – 1.5	0.30	303	33	28	24	21	17	14	12	11
Heavy Silty Clay Loam	1.5 – 2.0	0.20	455	50	43	34	30	25	22	17	15
Sandy Clay	>2.0	-	NOT SUITABLE								
Silty Clay	>2.0	-	NOT SUITABLE								
Clay	>2.0	-	NOT SUITABLE								

Minimum and maximum trench widths are 18 and 36 inches, respectively.
** Bedroom is equivalent to 150 gallons per day.

SOURCE: Miss Code Ann. §41-67-3

Figure I – Top View of Connecting Laterals for Large Diameter Pipes

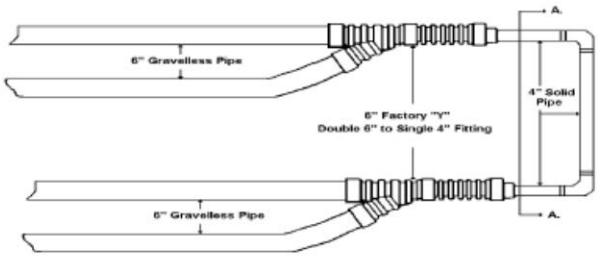

Top View (Double Six Connecting Lateral)

The double six lines shall be joined with a factory connector that will reduce the two lines to a single four inch pipe. The crossover will be constructed with solid pipe and the factory connector will be used to go from four inch to double six for the lower line.

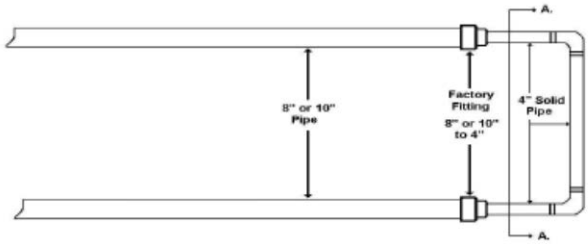

Top View (8 and 10 inch Connecting Lateral)

The upper line shall be joined to the crossover line with a factory connector that will reduce the 8 or 10 inch line to a four inch pipe. The crossover will be constructed with solid pipe and the factory connector will be used to go from four inch to 8 or 10 inch pipe for the lower line.

SOURCE: Miss Code Ann. §41-67-3

Figure II – Connection Laterals of Multi-pipe System, Expanded Polystyrene System, and Chamber System

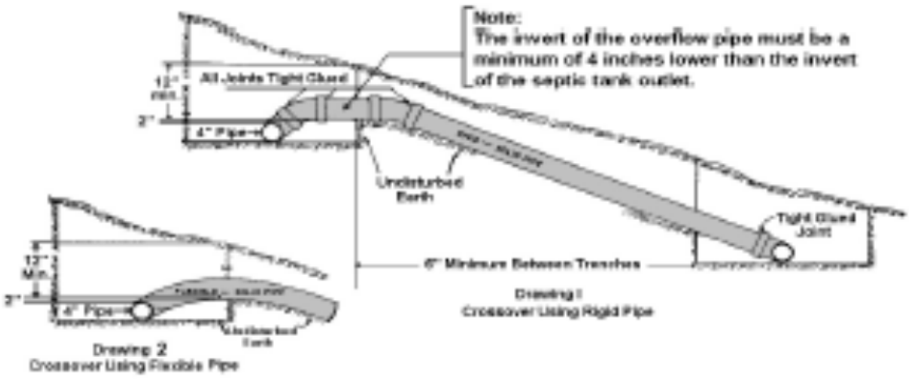

SOURCE: Miss Code Ann. §41-67-3

Subchapter 6. SUBSURFACE DRIP IRRIGATION

Rule 5.6.1. Subsurface Drip Irrigation is a system that utilizes 3 basic design principles. They are (1) uniform distribution of effluent, (2) dosing and resting cycles and (3) shallow placement of tubing. This system uses small diameter pipe with emitters and must be preceded by a treatment system that conforms to the manufacturer's specifications particular to that system. The effluent must be adequately filtered before distribution to the disposal field(s). Only Subsurface Drip Irrigation Systems that provide for **timed dosing** are acceptable. The term manufacturer, unless otherwise specified, is considered the manufacturer of the treatment device. (Figure I)

SOURCE: Miss Code Ann. §41-67-3

Rule 5.6.2. **Definitions**

1. Advanced Treatment System – an Individual On-site Wastewater treatment system that complies with Section 41-67-10. ***Miss Code* of 1972, Annotated 41-67-2(a)**

2. Components – all physical, mechanical, and electrical components of any wastewater disposal system.

3. Distribution manifold – pvc pipe that delivers the treated effluent to the drip tubing.

4. Emitter – small labyrinth inside of drip tubing that eliminates pressure and releases drops of treated effluent.

5. Maintenance – the inspecting and evaluating of an Alternative System or Advanced Treatment System. The replacement of any component registered with a specific Advanced Treatment System (i.e., aerator, diffuser, control panel, etc.).

6. Subsurface Drip Irrigation System – a system that relies on advanced treatment and filtration of the treated effluent. Final disposal occurs in the upper limits of the soil horizon and is distributed through small diameter tubes that have emitters that slowly drip the treated water into the soil.

7. Tubing – a small diameter line made of a material that forms a tube which contains emitter and manufacturer’s fittings.

8. Vacuum breakers/air release valve – relieves pressure off the treated effluent and allows air to escape the system without causing damage.

SOURCE: Miss Code Ann. §41-67-3

Rule 5.6.3. **Design:** Utilizing USDA soil groups as classified by textures is the most appropriate criteria on which to base loading rates for this system. The size of the disposal field shall be based on the most restrictive soil, naturally

occurring within 2 feet of the ground surface or to a depth of 1 foot below the trench bottom, whichever is deeper. Criteria and techniques for soil and site evaluation can be found in Chapter 03 Regulation Governing Residential On-site Wastewater Disposal Systems: Soil and Site Evaluation.

1. Prior to the design of the Subsurface Drip Irrigation System, the suitability of the site must be demonstrated through acceptable soil permeability rates, acceptable soil conditions (Table I) and other topographic characteristics. The design and construction of the Subsurface Drip Irrigation System must conform to the drip tubing manufacturer's specification (Figure 1).

2. A minimum of 6 inches of naturally occurring soil must be present above a restrictive horizon or a predominantly gray soil (>50%) before placement of appropriate fill. Subsurface Irrigation System is not recommendable on hydric soils conditions.

3. Except where hydric soils are present, a clean fill material may be used to overcome seasonal water table limitation. The fill material shall consist of a minimum of 50 percent sand particles equal to or greater than 0.25 *mm*. Clay content shall be 20 percent or less. Organic matter shall be removed from the native soil surface prior to placing and incorporating the fill. This fill must be incorporated into the native soil to prevent a textural interface from developing. When fill material is used the entire fill area must be sodded to prevent erosion, or other effective erosion control methods used. The full depth of fill material must extend at least 2 feet in all directions from drip tubing and at that point shall be sloped at a grade of no steeper than 3 to 1.

4. In soils that contain a restrictive horizon, within 5 feet of the surface, there shall be a minimum of 12 inches of unsaturated soil between the bottom of the drip tubing and any perched or seasonal water table.

5. In soils that do not contain a restrictive horizon, within 5 feet of the surface, there shall be a minimum of 24 inches of unsaturated soil between the bottom of the drip tubing and any perched or seasonal water table.

6. Drip tubing must be installed a minimum of 6 inches deep. The maximum depth may not exceed 18 inches. In all cases there shall be a minimum of 12 inches separation between the water table and restrictive horizon.

7. Minimum separation between drip emitter shall be 2 feet. A 2 foot horizontal separation must be between drip tubing lines for slopes of less that 20 percent-for slopes of 20 percent or greater shall be a minimum of 3 foot horizontal separation.

8. Drip tubing shall either be placed 4 inches lower than the supply manifolds or water breaks shall be used to prevent effluent from flowing along the drip tubing to the supply manifold trenches.

9. Valves, fittings, level control switches and all other components must be designed and manufactured to resist the corrosive effects of wastewater and common household chemicals.

10. Electrical equipment shall be protected with safety devices (overload interrupting devices, fuses, etc.). Electrical equipment shall comply with appropriate *National Electrical Manufacturer's Association (NEMA)* requirements. Electrical component parts shall be covered by the manufacturer's limited warranty.

SOURCE: Miss Code Ann. §41-67-3

Rule 5.6.4. **Location / Setbacks:**

1. All components of the Subsurface Drip Irrigation System shall be located a minimum of:

   a. Water Supply (Public/Private)

      i. 100 feet from any public, private or individual potable water sources, unless protected by topographic features.

      ii. 50 feet from any public, private or individual potable water source for all vessel(s) holding wastewater.

   b. Water Supply Components

      i. 10 feet horizontal separation from any potable water line.

      ii. 10 feet horizontal separation from any water meter.

      iii. Potable water lines must not pass under or through any part of the wastewater disposal system which includes the collection and distribution of the wastewater or effluent.

   c. Sensitive Waters

      i. 100 feet on slopes of greater than 8 percent

      ii. slopes of less than or equal to 8 percent (Table I)

   d. Property Lines

      i. 10 feet down slope or same grade

ii. 10 feet up slope.

e. Residence and Buildings

i. 5 feet from habitable and non-habitable

f. Additional Structures

i. 5 feet from porches, patios, decks, walkways, driveways and parking areas

ii. 25 feet from swimming pools

2. No vehicular traffic or parking is allowed in the area of the treatment and disposal system.

3. Advanced treatment, pump chamber, and Subsurface Drip Irrigation field shall not be located under dwellings or other permanent structures.

4. Disposal shall not be located in depressed areas where surface water will accumulate. Provision shall be made to minimize the flow of surface water.

5. Where all or part of the treatment and disposal system is proposed to be installed on property other than the owner's, a deeded easement in perpetuity shall be legally recorded in the appropriate county. The deeded easement shall be obtained to include a sufficient area to permit access, construction and maintenance.

6. Deeded easements or right-of-way areas for utilities, surface or subsurface drainage, roads, streets, ponds or lakes shall not be used as available space for location of a Subsurface Drip Irrigation System.

7. Drip Tubing shall be on contour and shall not be installed perpendicular (or up and down, etc.) to the slope. Elevation differences in a line or the entire grid shall not exceed the drip tubing manufacturers' specifications.

SOURCE: Miss Code Ann. §41-67-3

Rule 5.6.5. **Treatment:**

1. Wastewater effluent must meet the requirement established by *American National Standards Institute/National Sanitation Foundation* (*ANSI/NSF) International Standard Number 40* testing protocol, as set forth in Regulations Governing Residential Individual Onsite Wastewater Disposal Systems: Certification. The type of treatment must also conform to drip tubing manufacturers' specifications.

2. The treatment and dosing chamber shall be designed, constructed and installed so all joints, seams, and component parts shall preclude infiltration of groundwater, and prevent escape of wastewater or liquids.

SOURCE: Miss Code Ann. §41-67-3

Rule 5.6.6. **Distribution:**

1. Drip Tubing

   a. The drip tubing may be installed using any of the following methods:

      i. Excavation by a trenching machine.

      ii. Approved plowing method as determined by the tubing manufacturer. The insertion tool must be of the type that does not pull or stretch the drip line during insertion. The use of "cable plows" or any type insertion method that employs pulling the drip line through the plowed trench is prohibited.

   b. To insure equal dosing of the field there can be no more than a 10 percent variance in the flow between any 2 emitters in the entire field.

   c. The length of each distribution line shall not exceed drip tubing manufacturer's specifications to insure equal distribution to each emitter.

   d. If necessary, pressure compensating devices or regulators shall ensure equal distribution from all emitters at +/- 10% of the designed discharge rate.

   e. Emitter outlet orifices are non-directional device.

2. Pump Chambers

   a. During normal operating procedures the inlet to the treatment system shall not become surcharged.

   b. The pump chamber shall have a minimum capacity of 1.5 times the estimated daily flow.

   c. The pump chamber shall be equipped with an audible high water alarm, and may utilize a functional self-opening relief valve.

d. The pump chamber shall have a grade level access allowing a minimum of 17 inch diameter or 15 inch square, to allow servicing and/or removal of the largest component in the chamber. Access ports shall be protected against unauthorized entrance or removal, by use of tamper proof fasteners or a lid weighing 65 pounds or more.

e. The pump chamber shall be vented through the grade level access or by means of a separate vent. In either case, the vent shall be a minimum of 1 inch in diameter.

f. The pump chamber shall be made of material resistant to the corrosive effects of wastewater and designed to withstand the lateral and bearing loads to which it is expected to be subjected.

g. All openings shall be sealed with mastic, butyl rubber or other pliable sealant that is waterproof, corrosion resistant and approved for use in contact with wastewater, in a manner to prevent the entrance of surface and groundwater.

h. The high water alarm must be set as to allow a reserve capacity equal to ½ day estimated flow.

3. Minimum Pump Specifications

a. The pumping system shall be capable of dosing the disposal field a minimum of 6 equally spaced doses per 24 hour period. Each dose volume shall not exceed the estimated maximum daily flow divided by the number of dosing cycles. It is acceptable that daily usage of less than the design flow rate will result in a diminished number of cycles. An emergency override float is required to accommodate conditions which exceed the normal daily flow rate. (Table III).

b. The pumping system shall be designed to discharge the required volume of wastewater within the pressure range specified by all component-manufacturers.

c. The pump shall be equipped with a low water cutoff to prevent damage to the pump during low water conditions in the pump chamber.

d. The pump shall be constructed of corrosion resistant materials suitable for effluent pumping.

e. The pump shall be sized per pump and components manufacturers' specifications to meet or exceed the hydraulic requirement of the system.

f. The pump shall be installed as not to violate the pump warranty.

g. The suction and pressure lines shall be Schedule 40 or equal and be sized to meet or exceed the hydraulic requirements of the system.

4. Minimum Filter Specifications

a. The filter shall filter effluent to prevent clogging to the specifications of the drip tubing manufacturer.

b. The filter shall achieve the required filtration at a rate equal to or greater than the peak discharge rate, including filter and/or system backwash.

c. An independent third party, acceptable to the Division, shall certify the filter performance. Verification from a manufacturer of filters or by an independent registered Professional Engineer.

d. The filter shall be made of material resistant to the corrosive effects of wastewater and common household chemicals.

e. The filter shall be readily accessible for inspection, service and/or maintenance.

f. The filter flush volume and velocity shall be per filter manufacturer's specifications.

g. The filter residue shall be returned to the treatment system.

h. The Subsurface Drip Irrigation System must provide an automatic field flush to prevent the build-up of solids in the distribution system, with its discharge returning to the treatment system and be capable of achieving a flushing velocity of a minimum of 1 foot per second. The return line must be permanently installed as a component of the system. A hose bib shall be prohibited as a component.

5. Component Specifications

a. Vacuum breakers shall be installed as per drip tubing manufacturer's specification, a minimum of 1 vacuum breaker/air release valve for each drip field zone.

b. Vacuum breakers shall be located in a protective enclosure that will prevent the accumulation of any substance that would prevent their proper operation and shall have a grade level access.

c. All materials shall meet applicable *American Society for Testing and Materials (ASTM)* standards and be resistant to common household chemicals. The drip tubing manufacturer must certify drip tubing as designed and manufactured for the disposal of wastewater. The drip tubing must be color coded, by the manufacturer, to be easily identified as tubing designed for wastewater disposal.

d. Equipment susceptible to freezing must be adequately protected.

SOURCE: Miss Code Ann. §41-67-3

Rule 5.6.7. **Documentation:**

1. Installation Manual

a. The drip manufacturer must provide for registration, detailed instructions for installation, initiation of service and operation and maintenance to the distributor, installer and Division of On-site Wastewater. Specific instructions shall include but not limited to:

i. Recommendations concerning types of wastewater which cannot be disposed of by the system.

ii. Arrangement of plumbing connections.

iii. Electrical wiring of components.

iv. Installation instructions that specifies how to locate the system in well drained areas that also provides protection for vents, pumps, filters and controls from snow, ice, or water vapor accumulations.

v. A drawing with each major component numbered, and identified with the same designation on an illustration, photograph, or print.

vi. Recommended frequency of maintenance; maintenance instructions; and procedures for removal and disposal of wastes.

2. Homeowner's Manual

a. A Homeowner's manual shall be provided to the consumer by the drip tubing and advanced treatment unit manufacturers with each Subsurface Drip Irrigation system. The manual shall include:

i. Model number.

ii. Design and flow diagrams.

iii. Limited warranties.

iv. Replacement and service policies.

v. General installation instructions that specifies how to locate the system in well-drained areas that also provides protection for vents, pumps, filters, and controls from snow, ice, or water vapor accumulations.

vi. Detailed operation and maintenance requirements (including consumer responsibility, parts, and service).

vii. Recommendations concerning types of wastewater which cannot be disposed of by the system.

viii. Arrangement of plumbing connections.

ix. Electrical wiring of components.

3. Limited Warranty

a. The manufacturer shall provide a 2 year limited warranty, from date of installation, covering all parts and materials.

b. Each manufacturer shall furnish the consumer with a limited warranty identifying the replacement policy covering all mechanical and electrical component parts.

4. Initial Service Policy

a. A 2 year initial service policy shall be furnished to the consumer by the manufacturer, and shall be included in the original purchase price. This policy shall provide as a minimum:

i. The 4 inspection/service calls (at least one every 6 months) over the 2 year period including inspection, adjustment, and servicing of mechanical, electrical, and other applicable component parts to insure proper function. The first inspection shall be conducted a minimum of 6 months from installation.

b. If any improper operation is observed, which cannot be corrected at the time of the service call, the consumer and the Department shall be notified immediately in writing of the conditions and the estimated date of correction.

5. Continuing Maintenance Agreement

   a. A continuing maintenance agreement, in perpetuity, is required on Subsurface Drip Irrigation Systems. Property owner must submit an Affidavit (Maintenance) and a copy of the current continuing maintenance agreement before system is approved or re-approved as an existing system.

6. Stand-by Parts

   a. Standby mechanical and electrical component parts shall be stocked by the local distributor for use when the drip system's mechanical or electrical components must be removed from the installation site for repairs.

7. Guaranteed Parts

   a. The physical, mechanical and electrical component parts shall be guaranteed against any defects in material and workmanship as warranted. The cost of replacing damaged component parts, not due to reasonable wear and tear, is excluded from this provision.

8. Mechanical Parts

   a. Mechanical parts shall be protected against damage or impairment of efficiency by flooding or surcharging.

   b. Mechanical parts shall not require periodic maintenance or adjustment by the consumer other than changing a fuse and similar devices, or visual inspection of the warning light.

   c. Mechanical parts shall be covered by the manufacturer's limited warranty.

9. Service

   a. Service shall be available within no more than 2 days following a request.

10. Service Label

   a. A clearly visible, permanently attached label or plate, giving instructions for obtaining service, shall be placed at the audible signal.

SOURCE: Miss Code Ann. §41-67-3

Rule 5.6.8. **Responsibility:** The consumer shall be responsible for maintaining and operating the Subsurface Drip Irrigation System in accordance with the Regulations Governing Individual On-site Wastewater Disposal Systems, Appendixes, advanced treatment system manufacturer's specifications and the drip tubing manufacturer's specifications.

*SOURCE**:** Miss Code Ann. §41-67-3*

Rule 5.6.9. **Existing System:** In addition to the visual inspection conducted by the Environmentalist the following will apply:

1. The system must be inspected by a Certified Installer that is manufacturer's authorized representative to verify that the Subsurface Drip Irrigation System is functioning.

2. The manufacturer's authorized representative must furnish written verification, to the Department, that an inspection was made.

SOURCE: Miss Code Ann. §41-67-3

Figure I – Subsurface Drip Irrigation System (Example Sketch Only)

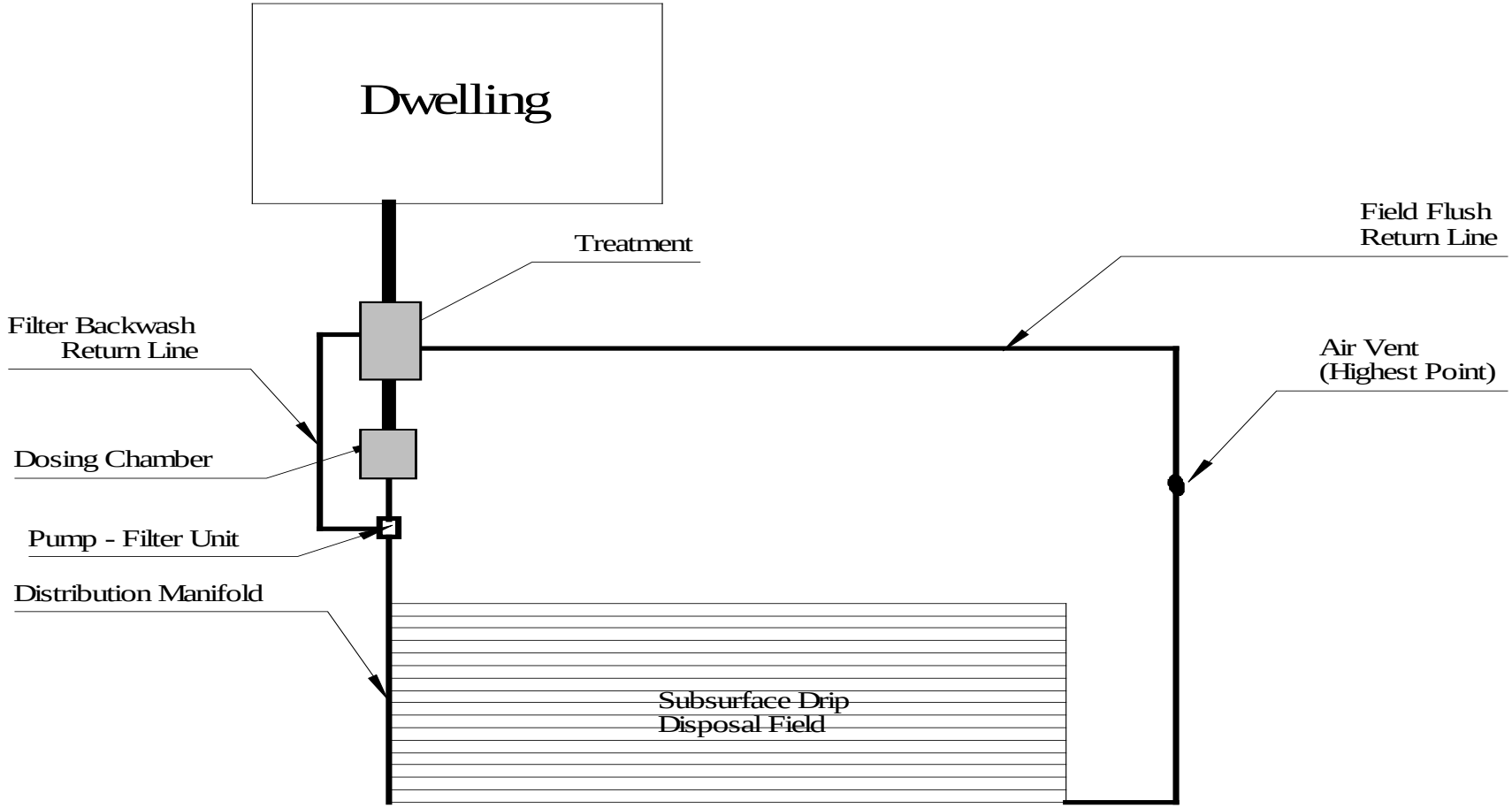

SOURCE: Miss Code Ann. §41-67-3

Table I – SIZING - Drip Irrigation

Results of the Soil and Site Evaluation

Soil Textural Class	Loading Rate GPD/ Ft^2	Lf Per Bedroom	Additional Lf/Person Over 2 Person Per	Depth of Drip Line in Inches
Gravel	NOT SUITABLE			
Coarse Sand	0.5	130	65	6-18
Medium Sand	0.5	130	65	6-18
Fine Sand	0.5	130	65	6-18
Loamy Sand	0.5	130	65	6-18
Sandy Loam	0.3	217	109	6-18
Light Loam	0.3	217	109	6-18
Heavy Loam	0.3	217	109	6-18
Silt Loam	0.3	217	109	6-18
Sandy Clay Loam	0.3	217	109	6-18
Light Clay Loam	0.15	434	217	6-18
Heavy Clay Loam	0.15	434	217	6-18
Light Silty Clay Loam	0.15	434	217	6-18
Heavy Silty Clay Loam	0.15	434	217	6-18
Sandy Clay	0.15	434	217	6-18
Silty Clay	0.05	1300	650	6-18
Clay	0.05	1300	650	6-18

SOURCE: Miss Code Ann. §41-67-3

Table II - **SETBACK REQUIREMENTS FROM SENSITIVE WATER (**Minimum Distance from the Water Edge)

Soil Textural Class	Slope of Less Than 8 Percent	Slope of More Than 8 Percent
Gravel	NOT APPLICABLE	
Coarse Sand	100 feet	100 feet
Medium Sand	100 feet	100 feet
Fine Sand	100 feet	100 feet
Loamy Sand	100 feet	100 feet
Sandy Loam	100 feet	100 feet
Light Loam	50 feet	100 feet
Heavy Loam	50 feet	100 feet
Silt Loam	50 feet	100 feet
Sandy Clay Loam	50 feet	100 feet
Light Clay Loam	50 feet	100 feet
Heavy Clay Loam	50 feet	100 feet
Light Silty Clay Loam	50 feet	100 feet
Heavy Silty Clay Loam	50 feet	100 feet
Sandy Clay	100 feet	100 feet
Silty Clay	100 feet	100 feet
Clay	100 feet	100 feet

SOURCE: Miss Code Ann. §41-67-3

Table III – Subsurface Drip Irrigation Pump Cycles (Minimum Requirements)

Pump Cycles/24 Hours	Gallons Pumped/Bedroom/Cycle	Additional Gallons Pumped Per Person Over 2 Per Bedroom
6	25	12.5
8	18.75	9.375
10	15	7.5
12	12.5	6.25

SOURCE: Miss Code Ann. §41-67-3

Rule 5.6.10. **Design Elevated Sand Mound Disposal System**

1. These guidelines present requisite site characteristics, design criteria, and construction techniques for on-site mound sewage systems. These guidelines provide a systematic approach to mound system design for typical domestic household wastewater. For systems serving other than single family dwellings the designer is cautioned that simple extrapolation of this information **may not** be appropriate.

2. When addressing wastewater flows that differ from a septic tank, such as those characterized by high biological oxygen demand (BOD5), total suspended solids (TSS), or oil and grease, the elevated sand-mound has inherent limitations. Wastewater from non-domestic sources should be evaluated on a case by case basis, to determine the amount of pretreatment necessary to apply to an elevated sand mound. The waste water applied to an elevated sand mound should not exceed 220 mg/l BOD5 or 145 mg/l TSS (no TSS particles should be retained on a 1/8th inch screen).

3. Mounds are an excellent treatment and disposal choice on appropriate sites, but they are not very forgiving. Special attention must be given to siting, design, pre-construction planning, site preparation, filter media selection, construction and maintenance of these systems. Quality control throughout the process cannot be overemphasized.

SOURCE: Miss Code Ann. §41-67-3

Rule 5.6.11. **General:**

1. Successful function of any on-site system is characterized by a two-fold process: treatment and disposal. The final treatment is accomplished predominately by physical and microbiological/chemical processes within the soil environment. These processes are affected by:

   a. wastewater strength and characteristics,

   b. soil moisture levels

   c. the nature of the receiving soil, and

   d. the soil loading rate.

2. Disposal is primarily affected by the depth of the unsaturated receiving soils, their hydraulic conductivity, and the area available for disbursement. The mound system relies on a single-pass flow pattern in unsaturated flow conditions through specified filter media (sand) for sewage treatment. The elevated sand-mound system incorporates the disposal component by discharging directly into the underlying soil.

3. A elevated sand-mound system is characterized by:

   a. a pretreatment device (a septic tank with an approved filter, or a treatment plant)

   b. pressure distribution components (pumping chamber, pump and controls, and distribution laterals.), and

   c. the “mound” (fig. 1). The “mound” consists of:

      i. filter media (sand),

      ii. an absorption area,

      iii. a distribution system, and

      iv. a soil cap and topsoil cover.

(Figure 1)

4. A septic tank with an approved filter or a aerobic treatment unit may be used as the pretreatment for the elevated sand mound. The effluent, pumped from the pump chamber into the distribution network in the absorption bed area, flows through the filter media where it is treated through biological and chemical processes. The treated effluent then passes into the natural soil, that must have at least six (6) inches of unsaturated soil.

SOURCE: Miss Code Ann. §41-67-3

Rule 5.6.12. Pre-Treatment: The preliminary treatment for an elevated sand-mound will be either an aerobic treatment unit or a septic tank with an approved filter. The pre-treatment method selected shall comply with the applicable sections of the Regulation Governing Individual Disposal.

SOURCE: Miss Code Ann. §41-67-3

Rule 5.6.13. **Pumping Chambers:**

1. The pumping chamber shall have a minimum capacity of 750 gallons or twice the daily flow, whichever is the largest.

2. The pumping chamber shall be equipped with an audible and/or visual high water alarm.

3. The high water alarm must be set to allow a reserve capacity of 50% in the chamber when activated.

4. The pumping chamber shall have a grade level access large enough to allow servicing and/or removal of the largest component in the chamber. Access ports shall be protected against unauthorized entrance or removal.

5. The pumping chamber shall be vented through the grade level access or by means of a separate vent. In either case, the vent shall be equal to or greater than two times the diameter of the inlet port of the pump.

6. The pumping chamber shall be made of material resistant to the corrosive effects of wastewater and designed to withstand the lateral and bearing loads to which it is subjected.

7. All openings shall be sealed with a mastic, butyl rubber, or other pliable sealant that is waterproof, corrosive resistant and approved for use in contact with wastewater, in a manner to prevent the entrance of surface and groundwater.

SOURCE: Miss Code Ann. §41-67-3

Rule 5.6.14. **Minimum Pump Specifications:**

1. Although timed dosed systems are preferred, an elevated sand mound may utilize either a timed dosed or on-demand dosing cycles. Each dose volume shall not exceed the estimated maximum daily flow divided by the number of dosing cycles.

2. The pump selected must be able to fully charge the distribution system without hydraulically overloading the absorption area.

3. The pump shall be constructed of corrosion resistant materials suitable for effluent pumping.

4. The pump shall be equipped with a low water cutoff to prevent damage to the pump during low water conditions.

5. The pump shall be sized per manufacturers' specifications to meet or exceed the hydraulic head of the system.

6. The pump shall be installed in compliance with the manufacturers' specifications so as not to violate pump warranty.

7. The suction and pressure lines shall be schedule 40 or equal and be sized to meet or exceed the hydraulic head of the system.

SOURCE: Miss Code Ann. §41-67-3

Rule 5.6.15. **Distribution System Specifications:**

1. The distribution system in an elevated sand mound shall consists of three components:

   a. a pressurized distribution manifold- that shall consist of a small diameter (1"- 1.5") schedule 40 pipe, to receive the effluent from the pump. This pipe shall be connected as to not create any dead ends, and shall have 3/8" holes drilled in it every 36" pointing up. See Figures 2 and 3. The effluent from the pump must come to the center of this distribution manifold and absorption area.

   b. field drain pipe to house the pressurized distribution manifold- A 4" field line pipe with the holes pointing down is acceptable. Other field drain pipe designs may be acceptable, but first must go through the experimental protocol.

   c. distribution media- ½" to 2.5" gravel to a depth of 1' is acceptable. The design of the absorption area must comply with design guidelines for gravel underground absorption. If other distribution media is approved, they must comply with the appropriate regulations and guidelines.

   d. **Figure 2: SIDE VIEW OF DISTRIBUTION SYSTEM IN ABSORPTION AREA OF AN ELEVATED SAND MOUND**

   e. **Figure 3: TOP VIEW OF ABSORPTION AREA WITH DISTRIBUTION NETWORK AND FIELD LINE PIPE.**

SOURCE: Miss Code Ann. §41-67-3

Rule 5.6.16. **Site Requirements for Elevated Sand Mounds:** It is not possible to outline every conceivable soil, site or design situation which may occur. The following section addresses basic criteria that every elevated sand-mound will need to follow.

1. Site conditions where elevated sand mounds are applicable:

   a. Permeable soils with high water tables: The elevated sand mound is useful in many difficult soils and can be effective in overcoming high water tables. In fact, the use of an elevated sand mound on permeable soils with high water tables may be the most practical use of this system. Whether the water table is seasonal or permanent, these soils have inadequate vertical separation to provide satisfactory treatment with conventional systems. The mound system addresses these conditions by elevating the absorption area to achieve the needed vertical separation. Passing

the effluent through the filter media will result in a more thoroughly treated effluent, before it reaches the water table.

b. Slowly permeable soils: The elevated sand mound has an application on these soils, although may be costly due to the size of the basal area required. The elevated sand mound applies the effluent to the lighter textured top soil over a large area moving laterally until it is absorbed into the less permeable subsoil. On slowly permeable soils with high water tables, 5:1 side slopes are recommended.

c. Excessively permeable soils: These sites present the risk of inadequate wastewater treatment before it reaches unprotected aquifers. The elevated sand-mound system treats the wastewater to a higher level before it reaches the excessively permeable sub-soil.

2. Slope limitations with elevated sand mounds: Slope limitations for elevated sand-mounds are more restrictive than for conventional systems, particularly for mounds used on sites with slowly permeable soils. Elevated sand-mounds should not be considered on sites with slowly permeable soils and slopes of 6% or steeper. Elevated sand-mounds should not be considered on sites with permeable soils and slopes of 12% or greater. Figures 4 and 5 show how to place an elevated sand-mound on a flat and sloping site.

a. **Figure 4**

b. **Figure 5**

3. Minimum soil depth requirements - This is probably the most important factor determining how well the elevated sand-mound will function. If the soil has a restrictive horizon, the seasonal water table may not be any closer than 6 inches from the surface. If the soil does not have a restrictive horizon, the seasonal water table may not be any closer than 12 inches from the surface. If the restrictive horizon is not well defined, 12" of unsaturated soil is required. In all cases, there shall be a minimum of a 24" separation between the bottom of the absorption area and the water table.

4. Topography-Slopes - On permeable soils the maximum slope for the elevated sand mound is 12%. On slowly permeable soils (light clay loam or heavier) the maximum allowable slope for the elevated sand-mound is 6%. A crest of a slope is preferred because the elevated sand-mound can be situated to allow flow in both directions away from the filled area. It is certainly preferred that the design allows for the effluent to flow away from the elevated sand mound.

5. Level sites-Design should allow the effluent to flow in every direction away from the elevated sand-mound. On level sites with slowly permeable

soils, effluent may have a tendency to stack under the absorption area that may result in surface seepage around the base of the mound. The elevated sand-mounds should be placed in areas that allow the effluent to flow away from the filled area.

6. Setback requirements- The set back requirements on Table 1 will be from the perimeter of the basal area, although no part of the system shall extend fully to a property line. The edge of the side slope must be at least 3 feet from a property line.

    a. **Table 1: Setbacks**

7. Reserve area- An area must be set aside to replace the elevated sand mound in the case of failure. Due to the nature of a mound failure the following criteria must be met:

    a. the area must be large enough to replace the entire system in a new untouched area.

    b. the area must meet all the initial requirements of the original mound system, including but not limited to soil conditions, water table restrictions and setback requirements.

    c. the area must not be used by property owner in a way which would adversely affect the placement of a new elevated sand mound system.

SOURCE: Miss Code Ann. §41-67-3

Rule 5.6.17. **System Design:**

1. A soil and site evaluation must be performed on the lot. See also Section VII. The loading rate of the natural soil must be determined from Table 2:

    a. **Table 2: Soil loading rates**

2. Determine the average daily flow from the residence: Number of bedrooms X 130 gallons per day

3. Determining the size of the absorption area, basal area, side slopes, and maximizing length requirements:

    a. Sizing the absorption area – The absorption area size shall be determined by the **loading** rate of the fill material. The fill material shall be coarse sand, 0.5-1.0 mm (USDA designation), and is the same as concrete sand (Section S-703, MS Standard Specification for State Aid road and bridge construction). The **loading rate** of this material is 1.2 gallons per day per square foot. Note: A fill

material as heavy as a light loam may be used, but this will change the size of the absorption area size. Use the appropriate **loading rate** of the fill to calculate the absorption area.

i. Example: Three (3) bedroom home @ 390 gallons per day

ii. 390 gallons per day / 1.2 gallons per day per square foot = 325 square feet

iii. Absorption area = 325 square feet

b. Sizing the basal area: Using the information gathered from the soil and site evaluation, determine the loading rate of the natural soil within two (2) feet of the surface. Use the heaviest textured soil loading rate to size the basal area. Divide the average daily flow from the residence by the loading rate of the natural soil.

i. Example: Three (3) bedroom home @ 390 gallons per day a natural soil of a heavy loam

ii. 390 gallons per day /0.45 gallons per day per square foot = 867 square feet basal area

c. Maximizing length of the elevated sand mound: To the greatest extent possible, the elevated sand mound should be as long as possible. The length of the basal area and absorption area must always be at least 4 times the width. However, the width of the absorption area shall never be less than 2 feet.

d. Filter media depth: There shall be a vertical separation between the seasonal water table and the bottom of the absorption area of at least 2 feet in every situation. This separation may include up to 12 inches of unsaturated natural soil.

e. Calculation of side slopes: Side slope requirements will be different on level sites than on sloping sites. The side slope on the downhill side must be longer than the side slope going up hill. The following chart gives the correction factor on various slope conditions:

(Table 3: Correction factors)

i. Example: Given: 3' high mound with 9' side slopes placed on a 6% slope.

ii. Table 3: Correction factors

iii. Upslope side slope: 9' X .85 = 7.65' side slope

iv. Downslope side slope: 9' X 1.22 = 10.98' side slope

f. **Figure 6**

g. **Figure 7**

SOURCE: Miss Code Ann. §41-67-3

Rule 5.6.18. System Placement

1. 1. All components of the elevated sand mound system shall be located a minimum of:

   c. Five feet from any dwelling.

   d. Ten feet from any property line.

2. The aerobic treatment plant, septic tank, and pump chamber shall be located a minimum of 50 feet from any public, private or individual potable water source.

3. The elevated sand mound shall be located at a lower elevation and a minimum of 100' from any public, private, or individual potable water source.

4. Potable water lines shall not pass under or through any part of the elevated sand mound system. Where a water supply line must cross a sewer line, the bottom of the water service within ten feet of the point of crossing, shall be at least 12" above the top of the sewer line. The sewer line shall be of Schedule 40 pipe with cemented joints at least ten feet on either side of the crossing. Water and sewer lines shall not be laid in the same trench. The water and sewer lines shall maintain a minimum separation distance of ten feet.

5. The area for the mound or the replacement area shall not be used for vehicular traffic or vehicular parking.

6. Aerobic treatment plants, septic tanks, pumping chambers or disposal system shall not be placed under a dwelling or other permanent structure.

7. Elevated sand mounds shall not be located in depressed areas where surface water will accumulate. Provisions shall be made to minimize the flow of surface water over the disposal system area.

8. Elevated sand mounds located on slopes of less than eight percent shall have a minimum setback from recreational waters, shellfish waters or other sensitive areas as prescribed in Table 4.

9. Elevated sand mounds located on slopes of greater than eight percent or greater shall be located a minimum of 100 feet from recreational waters, shellfish waters and other sensitive areas.

10. Where all or part of the elevated sand mound is proposed to be installed on property other than the owner's, an easement in perpetuity shall be legally recorded in the proper county. The easement shall be of sufficient area to permit access, construction and maintenance of the elevated sand mound.

11. No site for an elevated sand mound or replacement area shall be located wholly within an area which is frequently flooded, swamp, marsh, or wetland. Except that if permits have been issued by the proper regulatory agency authorizing the use of wetlands for building sites and the installation of an individual onsite wastewater disposal system. The property shall be evaluated using standard soil and site criteria for IOWDS.

12. When a proposed lot is located partially within a frequently flooded area, that portion of said lot not within the flood prone area may be considered for approval for the elevated sand mound.

13. A minimum of 6 (six) inches of naturally occurring soil must be present above a restrictive horizon or a predominantly gray soil before placement of any fill.

14. Easements or right-of-way areas for utilities, surface or subsurface drainage, roads, streets, ponds or lakes shall not be used as available space for an elevated sand mound.

SOURCE: Miss Code Ann. §41-67-3

Rule 5.6.19. Construction

1. Site Preparation: Good construction techniques are essential if the mound is to function properly. The following techniques should be considered:

    c. Step 1: Rope off the site to prevent damage to the area during other construction activity on the lot. Vehicular traffic over the area should be prohibited to avoid soil compaction.

    d. Step 2: Stake out the mound perimeter and bed in the proper orientation. Reference stakes set some distance from the mound perimeter are also required in case the corner stakes are disturbed.

    e. Step 3: Cut and remove any excessive vegetation. Trees should be cut at ground surface and the stumps left in place.

f. Step 4: Measure the average ground elevation along the upslope edge of the bed to determine the bottom elevation of the bed.

g. Step 5: Install the delivery pipe from the dosing chamber to the center of the mound. Lay the pipe below the frost or slope it uniformly back to the dosing chamber so it may drain after dosing. Back fill and compact the soil around the pipe.

h. Step 6: Plow the area within the mound perimeter. Use a two bottom or larger moldboard plow, plowing 7 to 8 in. (18 to 20 cm) deep parallel to the contour. Single bottom plows should not be used, as the trace wheel runs in every furrow, compacting the soil. Each furrow should be thrown upslope. A chisel plow may be used in place of a moldboard plow. Roughening the surface with backhoe teeth may be satisfactory, especially in wooded sites with stumps. Rototilling is not recommended because of the damage it does to the soil structure. However, rototilling may be used in granular soils, such as sands. Plowing should not be done when the soil is too wet. Smearing and compaction of the soil will occur. If a sample of the soil taken from the plow depth forms a wire when rolled between the palms, the soil is too wet. If it crumbles, plowing may proceed.

2. Fill Placement

c. Step 1: Place the fill material on the upslope edges of the plowed area. Keep trucks off the plowed area. Minimize traffic on the downslope side.

d. Step 2: Move the fill material into place using a small track type tractor with a blade. Always keep a minimum of 6 in. of material beneath the tracks of the tractor to minimize compaction of the natural soil. The fill material should be worked in this manner until the height of the fill reaches the elevation of the top of the absorption bed.

e. Step 3: With the blade of the tractor, form the absorption bed. Hand level the bottom of the bed, checking it for the proper elevation. Shape the sides to the desired slope.

3. Distribution Network Placement

c. Step 1: Carefully place the coarse aggregate in the bed. Do not create ruts in the bottom of the bed. Level the aggregate to a minimum depth of 6 in. (15 cm).

d. Step 2: Assemble the distribution network on the aggregate. The manifold should be placed so it will drain between doses, either out

the laterals or back into the pump chamber. The laterals should be laid level.

e. Step 3: Place additional aggregate to a depth of at least 2 in. (5 cm) over the crown of the pipe.

f. Step 4: Place a suitable backfill barrier over the aggregate.

4. Covering

c. Step 1: Place finer textured soil material such as clay or silt loam over the top of the bed to a minimum depth of 6 in. (15 cm).

d. Step 2: Place 6 in. (15 cm) of good quality topsoil over the entire mound surface.

e. Step 3: Plant grass over the entire mound using grasses adapted to the area. Shrubs can be planted around the base and up the sideslopes. Shrubs should be somewhat moisture tolerant since the downslope perimeter may become moist during early spring and late fall. Plantings on top of the mound should be drought tolerant, as the upper portion of the mound can become dry during the summer.

5. Operation and Maintenance

c. Routine Maintenance: A properly designed and constructed mound should operate satisfactorily with virtually no regular maintenance.

d. Rehabilitation: Three failure conditions may occur within the mound. They are (1) severe clogging at the bottom of the absorption area, (2) severe clogging at the fill material and natural soil interface, and (3) plugging of the distribution network. Usually these failures can be easily corrected.

i. If severe clogging occurs at the bottom of the absorption bed, its cause should first be determined. If it is due to failure to maintain the pretreatment unit, hydrogen peroxide to oxidize the accumulated organics at the infiltrative surface could be used. The chemical can be applied directly to the bed or through the dosing chamber. Because of the danger in handling this strong oxidant, this treatment should be done by professionals.

ii. If the clogging is due to overloading or unusual wastewater characteristics, efforts should be made to reduce the wastewater volume or strength. It may be necessary to

enlarge the mound. The mound cap should be removed and the aggregate in the absorption bed stripped out. The area downslope of the mound should be plowed and additional fill added to enlarge the mound to the proper size. The absorption bed can then be reconstructed.

iii. Severe clogging at the fill and natural soil interface will cause surface seepage at the base of the mound. This area should be permitted to dry and the downslope area plowed. Additional fill can then be added. If this does not correct the problem, the site may have to be abandoned.

iv. Partial plugging of the distribution piping may be detected by extremely long dosing times. The ends of the distribution laterals should be exposed and the pump activated to flush out any solid material. If necessary, the pipe can be rodded.

SOURCE: Miss Code Ann. §41-67-3

Figure 1 – Elevated Sand Mound (Example Sketch Only)

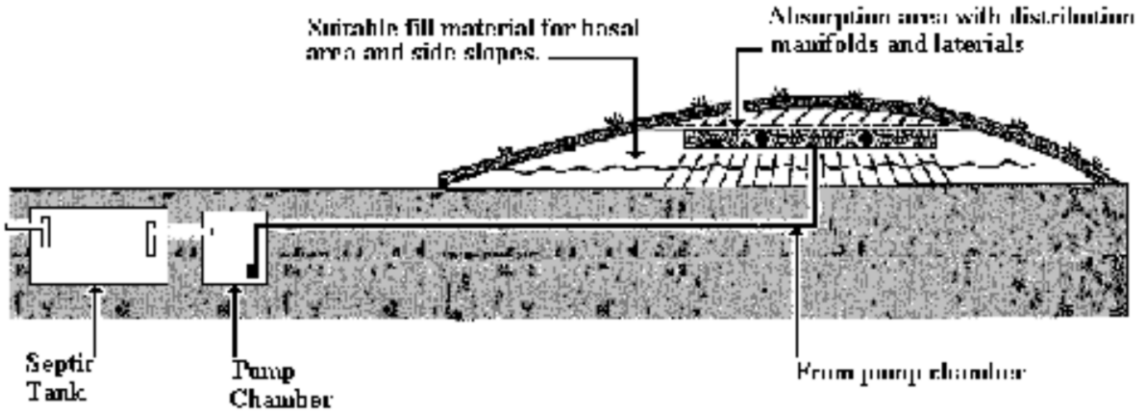

SOURCE: Miss Code Ann. §41-67-3

Figure 2 – Side View of Distribution System and Absorption Area

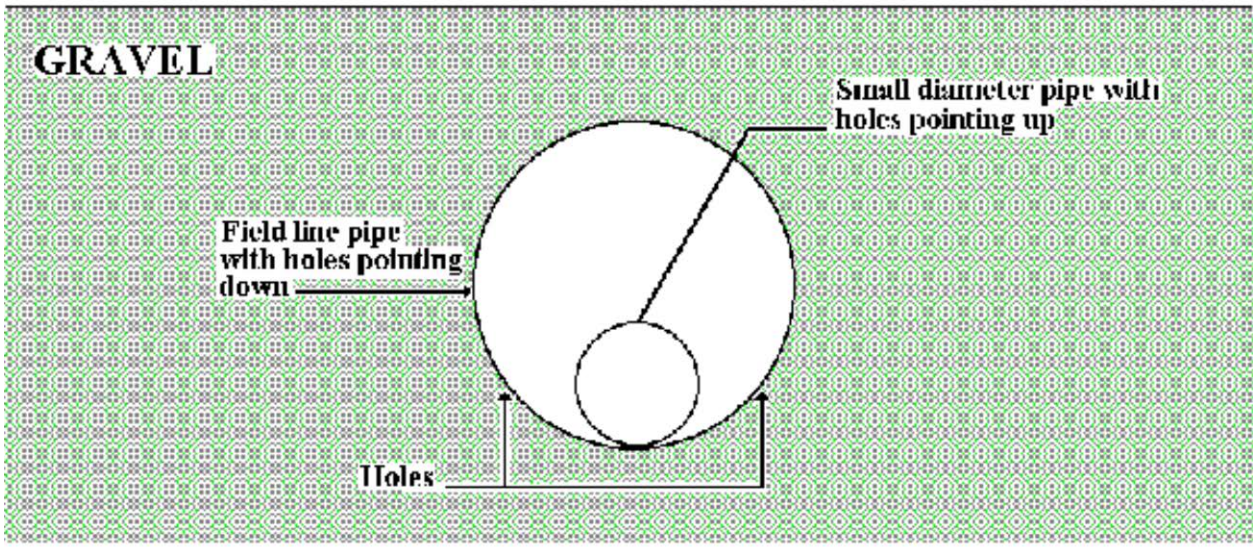

SOURCE: Miss Code Ann. §41-67-3

Figure 3 – Top View of Absorption Area with Distribution Network and Field Line Pipe

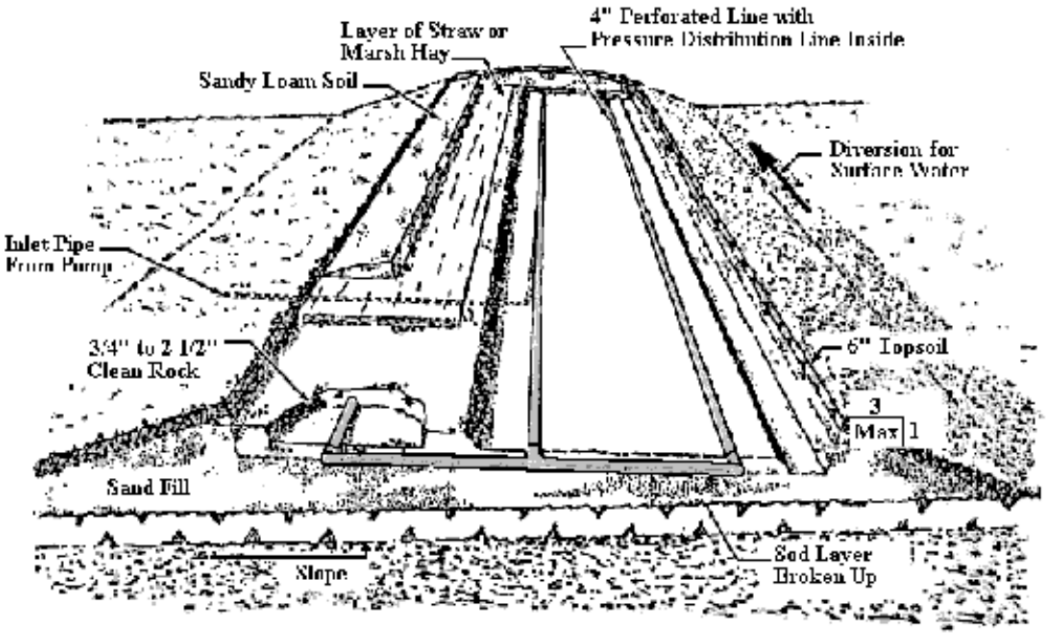

SOURCE: Miss Code Ann. §41-67-3

Figure 4 – Level Site Placement

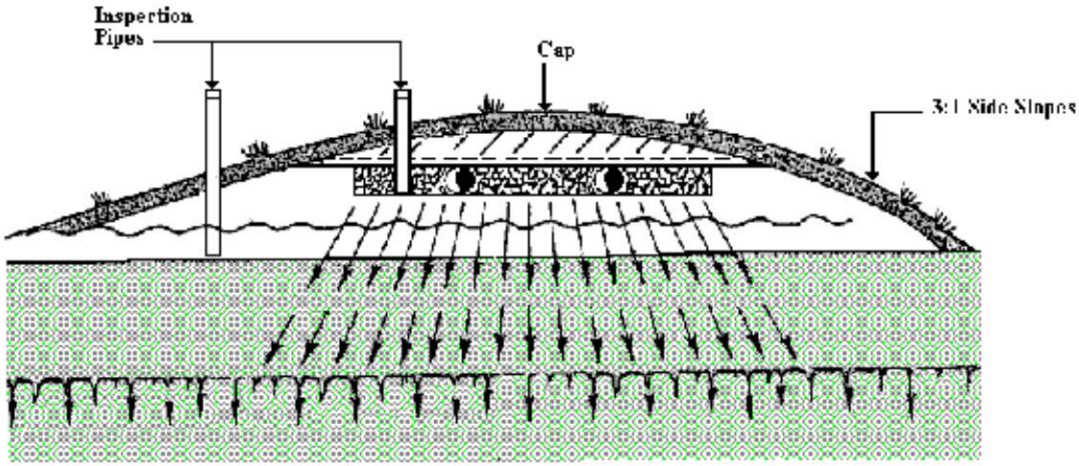

SOURCE: Miss Code Ann. §41-67-3

Figure 5 – Sloping Site Placement

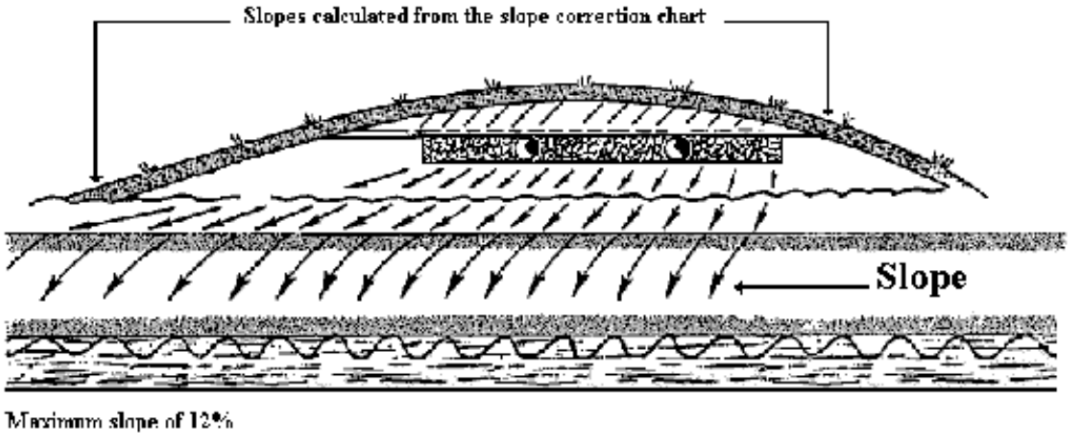

SOURCE: Miss Code Ann. §41-67-3

Figure 6 – Side Slope Calculation (Examples)

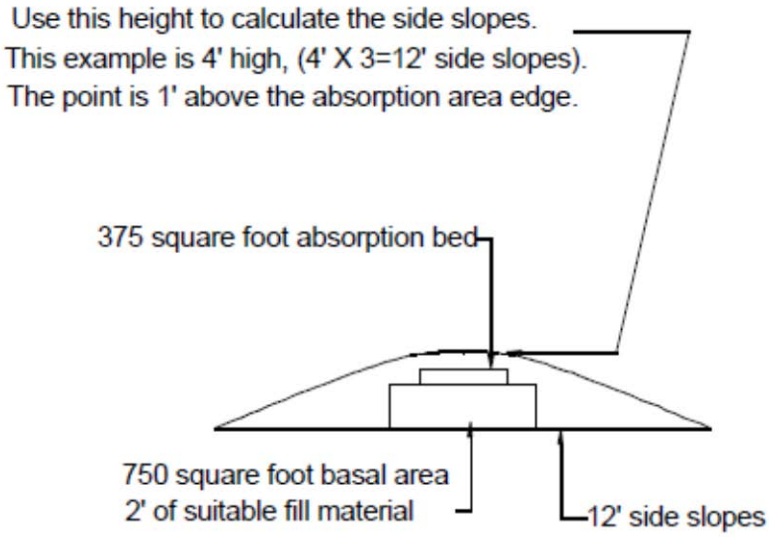

Figure 7

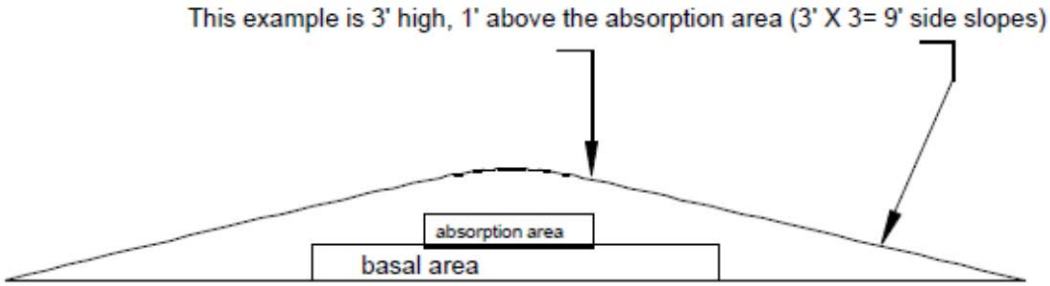

SOURCE: Miss Code Ann. §41-67-3

Table I – Setback Requirements

	When the item setback from is uphill	When the item setback from is downhill
Setback distances from property lines, driveways, buildings, ditches, etc.	10 feet	30 feet
Setback from wells	100 feet	Mound must be downhill from well on property. All other cases 100'.
Slope 8% or less for sensitive waters	Coarse to medium sand, fine sand, loamy sand, silty clay, clay	100 ft
Slope 8% or less for sensitive waters	Loam, silt, silt loam, sandy clay loam, silty clay loam, clay loam	50 ft

SOURCE: Miss Code Ann. §41-67-3

Table II – Soil Loading Rates

Soil Textural Class	Ribbon Length (inches)	EPA Manual Appl. rate gpd/ft^2
Gravel and Coarse Sand		1.2
Coarse to Medium Sand	-	1.2
Fine Sand, Loamy Sand	-	0.8
Sandy Loam	<.5	0.6
Loam	<.5	0.6
	.5-1	0.45
Silt Loam	<1	0.45
Sandy Clay Loam	1-2	0.45
*Silty Clay Loam or, *Clay Loam	1-1.5	0.30
	1.5-2.0	0.20

SOURCE: Miss Code Ann. §41-67-3

Table III – Correction Factors

slope as a percentage	downslope correction factor	upslope correction factor
0 %	1.00	1.00
2%	1.06	0.94
4%	1.14	0.89
6%	1.22	0.85
8%	1.32	0.81
10%	1.44	0.77
12%	1.58	0.74

SOURCE: Miss Code Ann. §41-67-3

Subchapter 7. SPRAY IRRIGATION DISPOSAL SYSTEM

Rule 5.7.1. **General:**

1. The treatment facility and pump/dosing chamber shall be designed, constructed and installed so all joints, seams, and component parts preclude infiltration of surface and groundwater, while preventing the escape of wastewater or other liquids.

2. Electrical equipment shall be protected with safety devices (overload interrupting devices, fuses, etc.). Electrical equipment shall comply with appropriate National Electrical Manufacturer's Association (NEMA). Electrical component parts shall be covered by the manufacturer's limited warranty and must be installed in a manner to eliminate potential contact with sewage or effluent, including connections.

SOURCE: Miss Code Ann. §41-67-3

Rule 5.7.2. **Soil and Site Evaluation:**

1. A satisfactory soil and site evaluation will comply with the following criteria:

    a. Absence of or protection from frequent flooding.

    b. Landscape position with positive surface runoff.

    c. Slopes of less than sixteen (16)%.

d. Depth to high water table of greater than six (6) inches.

e. Depth to bedrock, fragipan, redoximorphic features or plinthite of greater than twelve (12) inches.

f. Soil texture and color defined by the Natural Resource Conservation Service as indicating good drainage and suitable for surface application of wastewater, based on a soil boring of five (5) feet.

2. Sizing of the spray disposal field will be based on the most restrictive soil within twelve (12) inches of the naturally occurring ground surface.

3. To overcome the lack of sufficient depth, to a restrictive horizon and/or Seasonal High Water Table, a clean fill material of a texture of sandy loam may be used as fill material. Organic matter shall be removed, from the native soil surface, prior to placing and incorporating the fill. This fill must be incorporated into the native soil to prevent a textural interface from developing. When fill material is used the entire fill area must be sodded to prevent erosion, or other effective erosion control methods used. The full depth of fill material must extend at least ten (10) feet in all directions from outer edge of the spray field and at that point shall be sloped at a grade of no steeper than 3 to 1 (Table II).

4. The non compliance of one or more of the above items may (1) require a design alteration or (2) prohibit the use of a Spray Irrigation Disposal system. Slopes of greater than sixteen (16) % may be considered on a case by case basis.

SOURCE: Miss Code Ann. §41-67-3

Rule 5.7.3. **Location of Spray Irrigation Disposal Systems:**

1. All components of the spray irrigation disposal system shall be located a minimum of:

a. Five (5) feet from any dwelling or permanent structure.

b. Ten (10) feet from any property line.

2. The Advanced Treatment System and pump/dosing chamber shall be located a minimum of fifty (50) feet from any public, private or individual potable water source.

3. Potable water lines and wastewater lines shall not be laid in the same trench. The potable water lines and wastewater lines shall maintain a minimum horizontal separation of 10 feet. Where a potable water line must cross a wastewater line, the potable water line within ten (10) feet of

the point of crossing shall be at least twelve (12) inches above the wastewater line.

4. Spray Irrigation systems shall not be located in depressed areas where surface water will accumulate. Provisions shall be made to minimize the flow of surface water over the effluent disposal field.

5. There shall be maintained, from the outer edge of the spray pattern, the following distances:

    a. One hundred (100) feet from any public, private or individual potable water source and be located at a lower elevation.

    b. Fifty (50) feet from recreational waters, shellfish waters or other sensitive areas for spray fields located on slopes of less than eight (8) percent or if the soil texture is sandy loam or lighter or sandy clay or heavier.

    c. Seventy five (75) feet from recreational waters, shellfish waters or other sensitive areas for spray fields located on slopes of greater than eight (8) percent or if the soil texture is sandy loam or lighter or sandy clay or heavier.

    d. Twenty five (25) feet from dwellings, swimming pools, businesses or other inhabited structures.

    e. Twenty five (25) feet from lot lines, porches, patios and decks.

    f. Fifteen (15) feet from outbuildings.

    g. Ten (10) feet from walkways, private roads, driveways and parking areas.

    h. Effluent should not be sprayed upon any vessel containing wastewater.

6. Where all or part of the Spray Irrigation system is proposed to be installed on property other than the owner's, an easement in perpetuity shall be legally recorded in the proper county and a copy furnished to the local county Health Department prior to listing Spray Irrigation as an option. The easement shall be of sufficient area to permit access, construction and maintenance of the system.

7. It is the intent of these regulations that a minimum separation of fifty (50) feet between independent spray disposal fields be maintained. Over lapping of the required setback from property lines cannot be negated by the granting of easements.

8. In soils that contain a restrictive horizon (fragipan, chalk, bedrock, clay or silty clay), within two (2) feet of the surface, there shall be maintained a minimum of six (6) inches of unsaturated soil between the Seasonal High Water Table.

9. In soils that do not contain a restrictive horizon (fragipan, chalk, bedrock, clay or silty clay), within two (2) feet of the surface, there shall be maintained a minimum of twelve (12) inches of unsaturated soil between the Seasonal High Water Table.

SOURCE: Miss Code Ann. §41-67-3

Rule 5.7.4. **Registration:** The term "manufacturer" for this section will mean the Certified Manufacturer of the treatment method, unless otherwise specified. Each manufacturer's treatment and disposal components shall be registered with the Department as a system. The treatment method shall be in compliance with the current standards of *National Sanitation Foundation/American National Standards Institute International Standard 40 and/or 245* and the applicable sections of the regulations.

SOURCE: Miss Code Ann. §41-67-3

Rule 5.7.5. **Pump/Dosing Chambers:**

1. The pump/dosing chamber shall have a minimum working capacity of 1.5 times the maximum volume produced for timed-dose and per manufacturer's specifications for demand-dose systems.

2. The dosing chamber shall be equipped with an audible high water alarm.

3. The pump/dosing chamber shall have a grade level access large enough to allow servicing and/or removal of the largest component in the chamber. Access ports shall be protected against unauthorized entrance or removal.

4. The pump/dosing chamber shall be vented through the grade level access or by means of a separate vent. In either case the vent shall be a minimum of one (1) inch in diameter.

5. The pump/dosing chamber shall be made of material resistant to the corrosive effects of wastewater, chemicals used for disinfection and designed to withstand the lateral and bearing loads to which it is expected to be subjected.

SOURCE: Miss Code Ann. §41-67-3

Rule 5.7.6. **Minimum Pump Specifications**:

1. The pumping system shall be designed to deliver wastewater at the required volume and pressure specified by the spray irrigation head manufacturer.

2. The pumping system shall be equipped with a low water cutoff to prevent damage to the pump during low water conditions in the dosing chamber.

3. The pump shall be constructed of corrosion resistant materials suitable for effluent pumping.

4. The pump shall be sized per manufacturers' specifications to meet or exceed the hydraulic head of the system while delivering the required volume.

5. The pump shall be installed in compliance with manufacturers' specifications so as not to violate pump warranty.

6. The suction and pressure lines shall be PVC schedule 40 and shall be sized to deliver the required volume at the design pressure while not exceeding a velocity of five (5) feet per second.

SOURCE: Miss Code Ann. §41-67-3

Rule 5.7.7. **Minimum Filter Specifications:**

1. The filter shall filter the effluent to the minimum specifications of the spray irrigation head manufacturer to prevent clogging.

2. The filter shall be made of material resistant to the corrosive effects of wastewater and chemicals used for disinfection.

3. The filters shall be readily accessible for inspection and/or service.

SOURCE: Miss Code Ann. §41-67-3

Rule 5.7.8. **Minimum Specifications for Irrigation Equipment:**

1. Sprinklers, valves, controllers and all other equipment used in a spray irrigation system shall be designed, manufactured and warranted by their manufacturer for use in effluent disposal systems.

2. Sprinklers must be of low trajectory type designed to reduce aerosols. Low trajectory spray sprinklers have a nozzle trajectory equal to or less than thirty (30) degrees.

3. Sprinklers shall be connected to their supply line by means of polyethylene (PE) pipe or a swing joint manufactured specifically for this purpose.

4. Radius reduction by means of nozzle retaining screw, distance control diffuser pin or other similar devices shall not be allowed.

5. Impact and pop-up sprinklers may be used. Sprinkler risers greater than twenty four (24) inches in height must be braced.

6. Equipment susceptible to freezing must be adequately protected to prevent freezing.

SOURCE: Miss Code Ann. §41-67-3

Rule 5.7.9. **Minimum Specifications for Disinfection:** Effluent discharge from spray irrigation systems shall be adequately disinfected prior to surface application. The method of disinfection and the disinfection equipment must be in compliance with Chapter 6 Disinfection.

SOURCE: Miss Code Ann. §41-67-3

Rule 5.7.10. **Minimum Specifications for the Spray Field:**

1. Spray irrigation systems may not be installed in drain ways, swamps, marshes, floodplain, concave landscape positions or other areas which would be prohibited.

2. Treated effluent shall be sprayed evenly over the entire spray field area with non overlapping patterns. The spray field shall consist of a minimum of three (3) spray heads.

3. The effluent distribution system shall be designed, constructed and maintained to provide for even distribution of effluent throughout the spray field.

4. Surface runoff of sprayed effluent from the spray field area shall not be permitted. Rainwater shall be diverted away from the spray field area.

5. The spray field area shall be designed and operated to prevent surface accumulation of sprayed effluent.

6. In order to prevent entrapped air causing serious problems pipelines shall be routed on contour, downhill or even uphill but not up and downhill along the same section of pipe.

7. The size of the spray field area shall be determined by soil texture and slope of the site to be sprayed (See Table 1).

SOURCE: Miss Code Ann. §41-67-3

Table I – **SIZING – Spray Irrigation**

Results of the Soil and Site Evaluation

Soil Textural Class	Ribbon Lengths (Inches)	EPA Manual Application Rate GPD/Ft^2	Absorption Area in Ft^2/Bedroom			Additional Absorption Area Over 2 Persons Per Bedroom		
			Slope			Slope		
			0 to 8 %	9 to 12%	13 to 16%	0 to 8 %	9 to 12%	13 to 16%
Gravel	NOT SUITABLE							
Coarse and Medium Sand Fine and Loamy Sand Sandy Loam	< 0.5	1.2 0.8 0.6	694	928	1,040	347	478	520
Loam Silt Loam Sandy Clay Loam	< 0.5 – 1.0 < 0.5- 1.0 1.0 – 2.0	0.45	1387	1734	2323	694	867	1162
Silt Clay Loam Clay Loam Sandy Clay	1.0 – 2.0 1.0 – 2.0 > 2.0	0.2 – 0.3 0.2 – 0.3 -	2782	4637	6951	1391	2319	3476
Silty Clay Clay	> 2.0	-	6951	8693	11588	3476	4347	5794

SOURCE: Miss Code Ann. §41-67-3

Table II **FILL MATERIAL**

Seasonal High Water Table Depth (inches)	…with a Restrictive Horizon/Layer (inches)	…without a Restrictive Horizon/Layer (inches)
0	6	12
1	5	11
2	4	10
3	3	9
4	2	8
5	1	7
6	-	6
7	-	5
8	-	4
9	-	3
10	-	2
11	-	1
12	-	-

SOURCE: Miss Code Ann. §41-67-3

Figure I **SPRAY IRRIGATION SYSTEM**

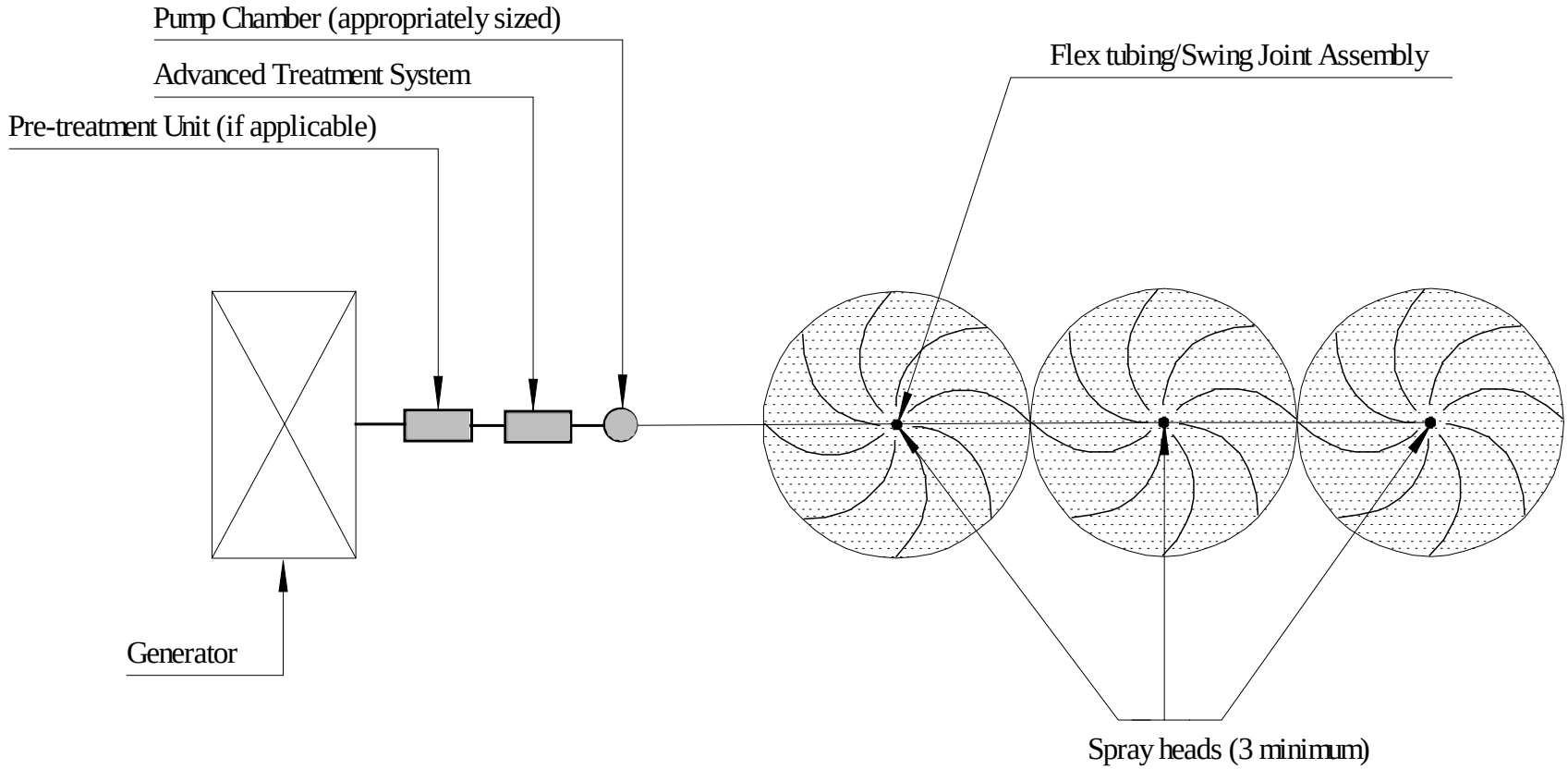

SOURCE: Miss Code Ann. §41-67-3

Figure II **FLEX TUBE/SWING JOINT ASSEMBLY**

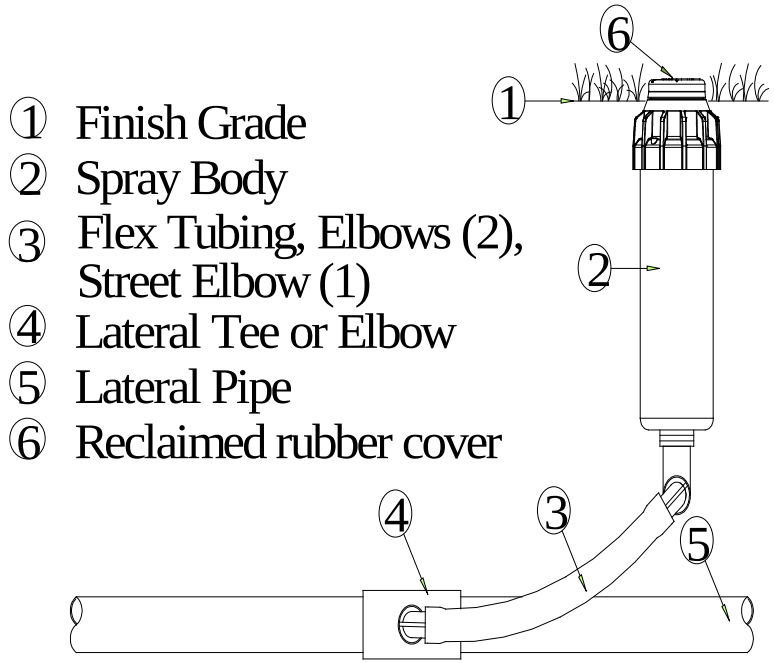

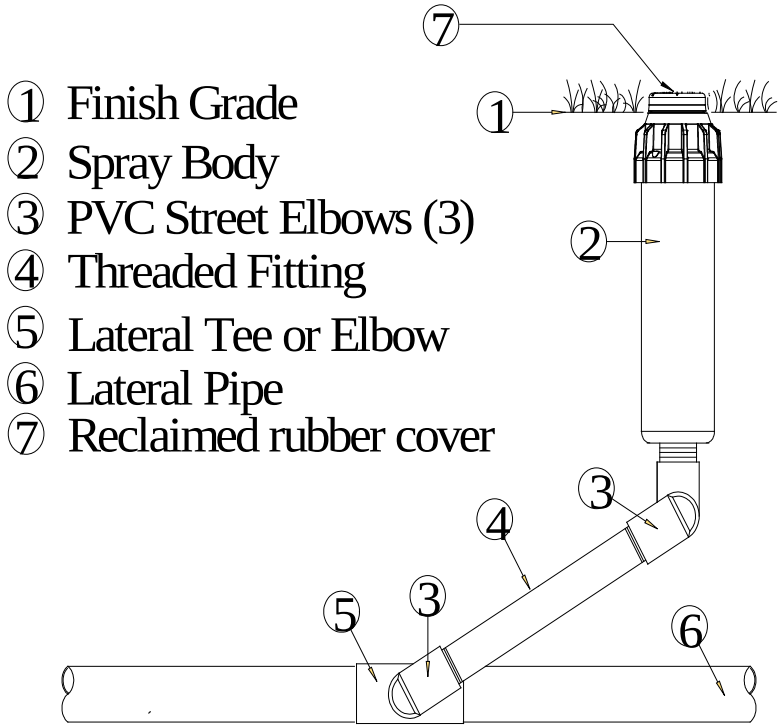

SOURCE: Miss Code Ann. §41-67-3

Subchapter 9. OVERLAND DISCHARGE

Rule 5.9.1. Overland Discharge is a system used to dispose Advanced/Alternate treated effluent. Overland Discharge may be a single (1) point discharge or multi-point (2 or 4) discharge, with a level manifold. These discharge options can be gravity-fed or pressurized, with the use of a pump. Careful evaluation of the site, soils and geographical conditions are necessary to prevent runoff, erosion, groundwater pollution and nuisance conditions.

SOURCE: Miss Code Ann. §41-67-3

Rule 5.9.2. **Definitions:**

1. Advanced Treatment System – an Individual On-site Wastewater treatment system that complies with Section 41-67-10. ***Miss Code* of 1972, Annotated** Section 41-67-2(a)

2. Components – all physical, mechanical, and electrical components of any wastewater disposal system.

3. Discharge area – area of land receiving the treated effluent.

4. Distribution box – A connection source for a single inlet line to multiple distribution lines.

5. Manifold – 3" or larger Schedule 40 PVC pipe used in distributing a flowing discharge from some type of advanced treatment unit or treatment filter, such as a Plant Rock Filter or Sand Filter.

6. Maintenance – the inspecting and evaluating of an Alternative System or Advanced Treatment System. The replacement of any component registered with a specific Advanced Treatment System (i.e., aerator, diffuser, control panel, etc.).

7. Multi-point discharge – 2 or 4 discharge points that deliver effluent from a level manifold. (Figure I, Figure II and Figure IV)

8. Single point discharge – discharge line consisting of 1 point only.

SOURCE: Miss Code Ann. §41-67-3

Rule 5.9.3. **Design:**

1. The discharge area receiving the effluent shall have a minimum 6 inches of naturally occurring soil free of a restrictive horizon, redoximorphic feature or predominately-grey color (>50%) and shall be maintained to prevent surface accumulation or ponding. Overland Discharge is not recommendable on hydric soils conditions.

2. The texture of the subsoil material having the slowest permeability rates within 2 feet below the surface receiving effluent shall be used to determine setback.

3. The discharge area must be sufficiently sized to maintain the outermost edge of the effluent.

4. Slopes of greater than 20 percent shall not be considered for discharge areas unless justified by a Certified Engineer Evaluator

SOURCE: Miss Code Ann. §41-67-3

Rule 5.9.4. **Location/Setbacks:**

1. The discharge area must be seeded, maintained with sod, permanent vegetative cover, or a wooded area.

2. Discharge area must be a minimum of:

   a. Water Supply

      i. 100 feet from any public, private or individual potable water sources, unless protected by topographic features.

      ii. 50 feet from any public, private or individual potable water source for all vessel(s) holding wastewater.

      iii. 10 feet horizontal separation from any potable water line.

      iv. 10 feet horizontal separation from any water meter.

      v. Potable water lines must not pass under or through any part of the wastewater disposal system which includes the collection and distribution of the wastewater or effluent.

   b. Sensitive Waters

      i. 100 feet on slopes of greater than 8 percent

      ii. Slopes of less than or equal to 8 percent (Table I)

   c. Property Lines

      i. 50 feet down slope or same grade

      ii. 10 feet up slope.

   d. Residence and Buildings

i. 25 feet from habitable

ii. 15 feet from non-habitable

e. Additional Structures

i. 25 feet from porches, patios and decks

ii. 10 feet from walkways, driveways and parking areas

iii. 25 feet from swimming pools

iv. 10 feet horizontal separation from an Advanced Treatment System

3. Discharge area shall not be located in depressed areas where surface water will accumulate. Provisions shall be made to minimize the flow of surface water over the effluent disposal area.

4. Where all or part of the treatment and disposal system is proposed to be installed on property other than the owner's, a deeded easement in perpetuity shall be legally recorded in the appropriate county. The deeded easement shall be obtained to include a sufficient area to permit access, construction and maintenance.

5. Deeded easements or right-of-way areas for utilities, surface or subsurface drainage, roads, streets, ponds or lakes shall not be used as available space for location of discharge areas.

6. No site utilizing a discharge area shall be approved which is located wholly within an area which is frequently flooded, swamp, marsh, wetland, or drain-way, etc. When a site is located partially within this area, that portion not directly affected may be considered for discharge area.

7. Treatment, disposal, disinfection and/or pump chambers shall not be located under dwellings or other permanent structures.

SOURCE: Miss Code Ann. §41-67-3

Rule 5.9.5. **Treatment:**

1. Wastewater disposed of by Overland Discharge must meet the requirement established by *American National Standards Institute/National Sanitation Foundation* (*ANSI/NSF) International Standard Number 40* testing protocol, as set forth in Regulation Governing Residential Individual Onsite Wastewater Disposal Systems: Certification.

2. Treated effluent must be adequately disinfected as outlined in Appendix 11 (Design Standard for Disinfection).

SOURCE: Miss Code Ann. §41-67-3

Rule 5.9.6. **Distribution:** The inlet and outlet on the tank (septic tank or ATU) must be 4 inch Schedule 40 pipe for a minimum of 3 feet onto undisturbed soil. Once the outlet pipe has extended a minimum of 3 feet onto undisturbed soil, it can then be reduced to a minimum of 3 inch Schedule 40 pipe for the entire discharge line.

1. Gravity Fed

   a. Single point discharge: Gravity-fed discharge using a single point discharge line on 1% or greater slope

   b. Distribution manifold: For gravity-fed multi-point discharge distribution by manifold, the level manifold must be constructed using flow diverting devices (Figure I) in such a manner to be self draining. Distribution box (Figure III): A distribution box may used for multi-point discharge. The distribution box must be installed level to ensure equal distribution of effluent. Outlet lines should have equal slopes for a minimum of 5 feet after leaving the D-box. The D-box should have a baffle wall, or some means of reducing the pressure from the inlet flow.

2. Pressurized Distribution

   a. Distribution box (Figure III): A distribution box may used for multi-point discharge. The distribution box must be installed level to ensure equal distribution of effluent. Outlet lines should have equal slopes for a minimum of 5 feet after leaving the D-box. The D-box should have a baffle wall, or some means of reducing the pressure from the inlet flow.

   b. Distribution manifold (Figure IV): If effluent is to be delivered to a level manifold under pressure, the distribution system shall be designed to provide pressure at the point of discharge not to exceed 5 pounds per square inch. This can be achieved by pumping directly into the head of the manifold or into a baffled distribution box.

SOURCE: Miss Code Ann. §41-67-3

Figure 1 – Gravity Fed Manifold

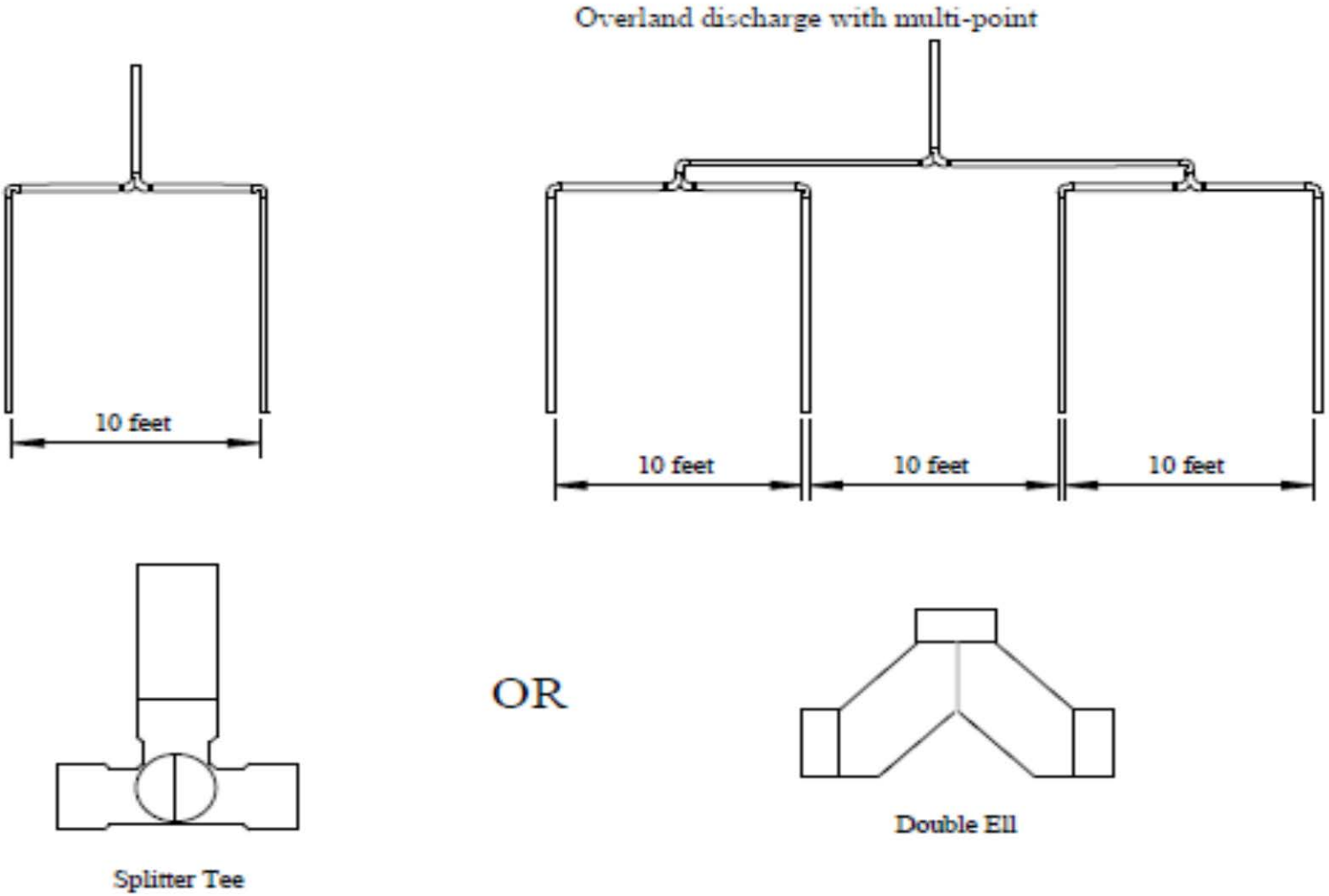

SOURCE: Miss Code Ann. §41-67-3

Figure 2– Terrace Plant Beds

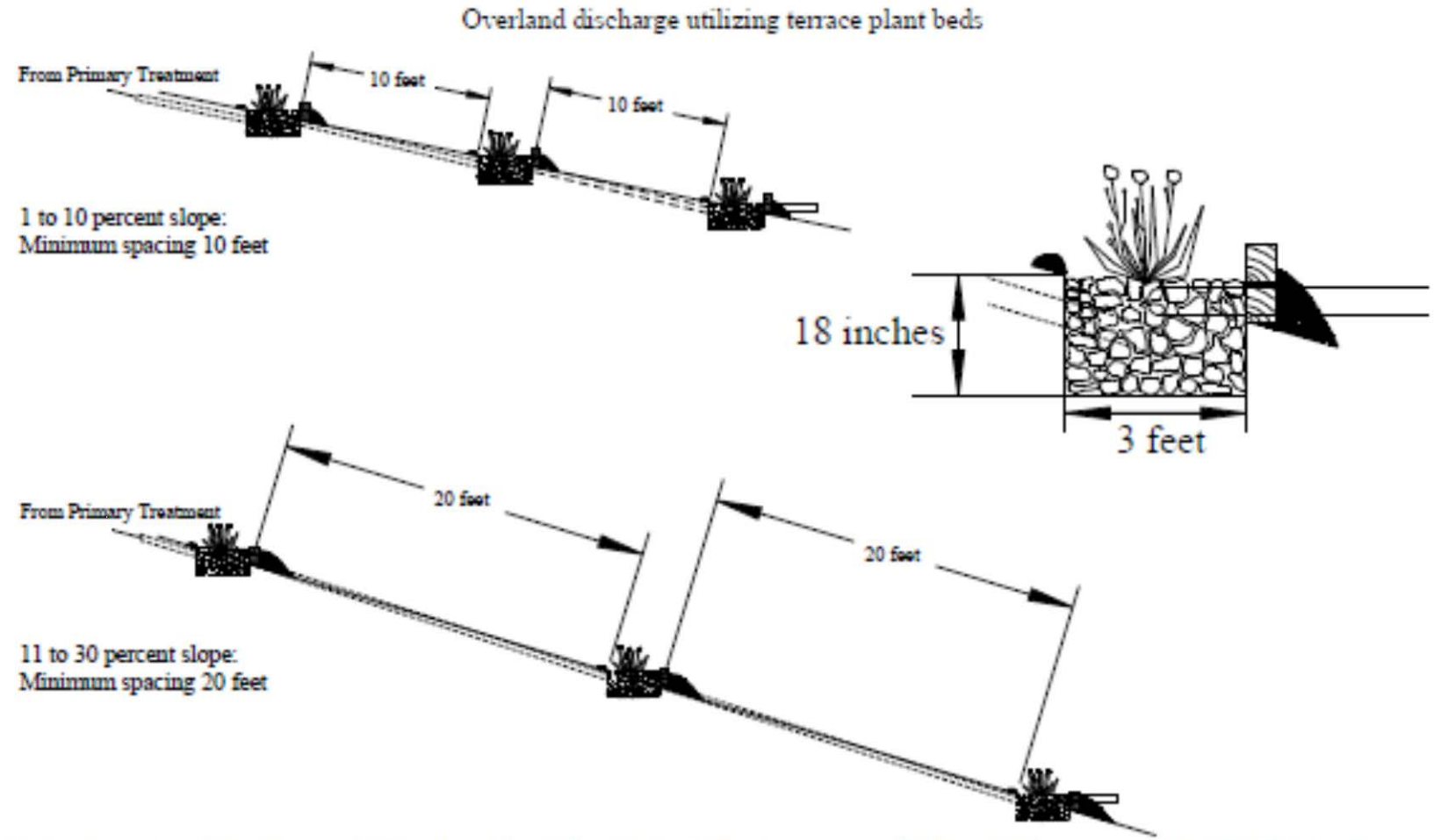

Further absorption of the effluent could be enhanced with the addition of plantings (canna, calla lilies, elephant ears, etc.) in a bed following the distribution manifold.

SOURCE: Miss Code Ann. §41-67-3

Figure 3– Distribution Box

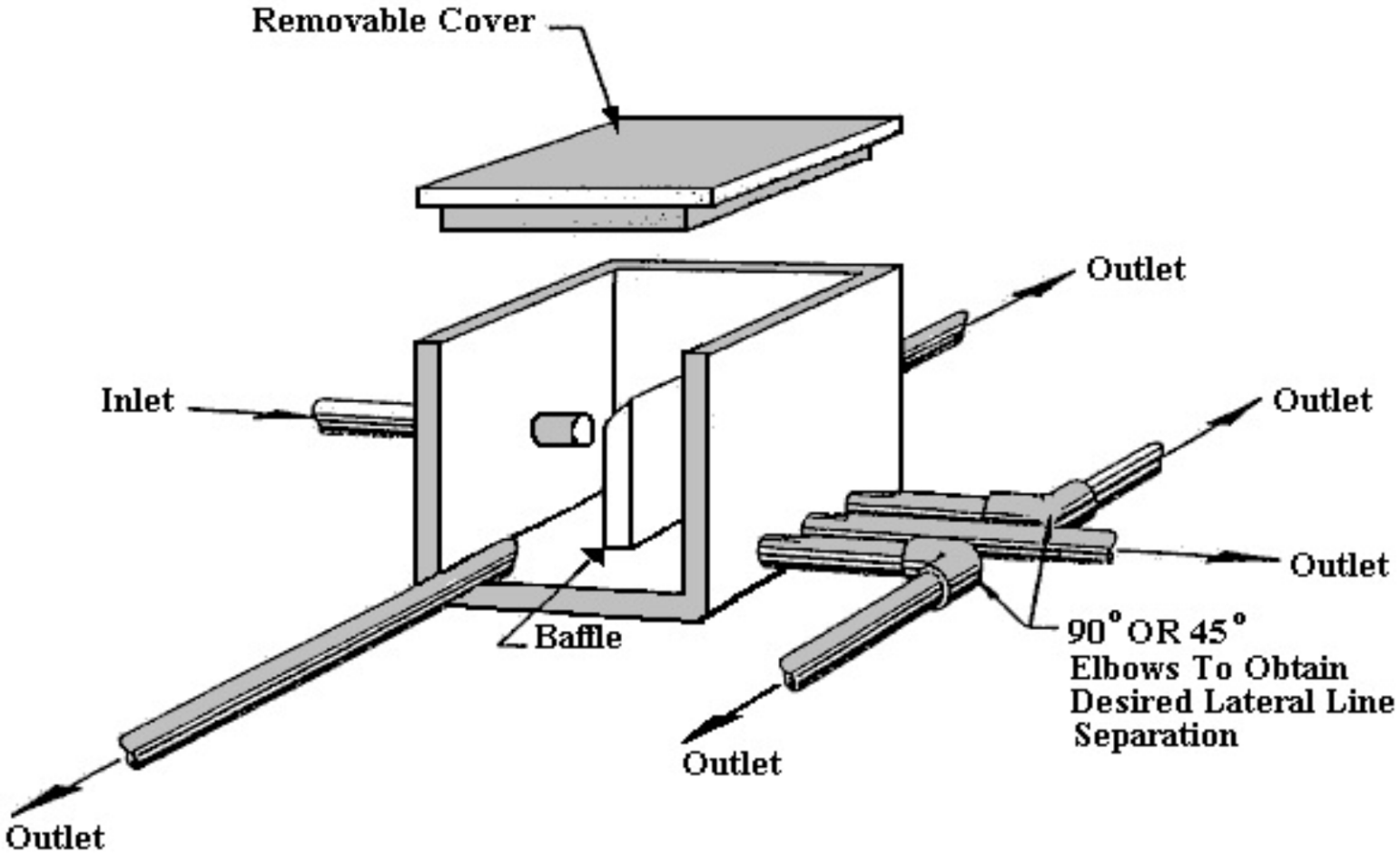

SOURCE: Miss Code Ann. §41-67-3

Figure 4 – Pressurized Manifold

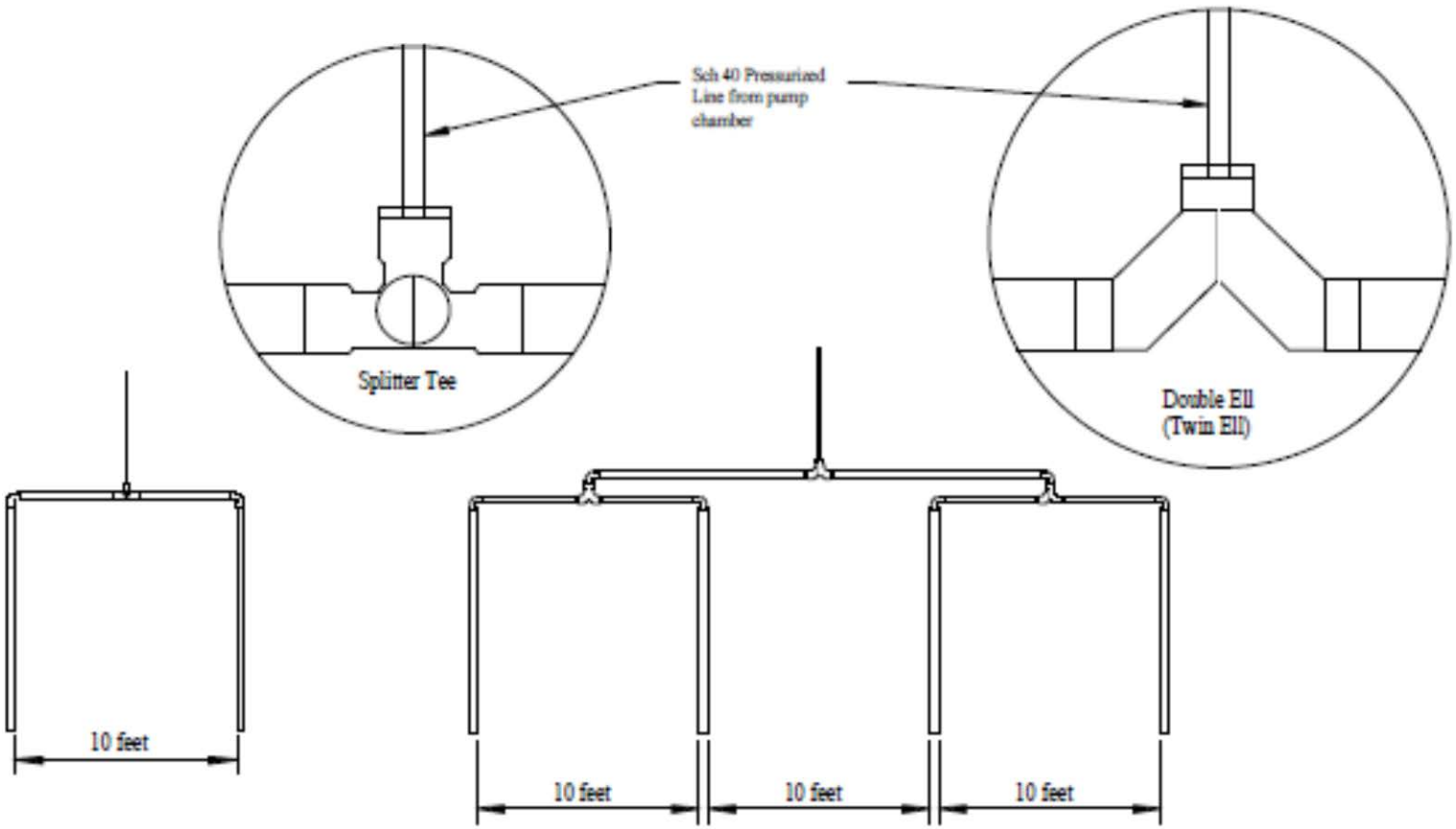

SOURCE: Miss Code Ann. §41-67-3

Subchapter 10. Non Waterborne Wastewater Systems

Rule 5.10.1. **General**. In remote areas of the State or certain transient or temporary locations, the use of non-waterborne systems such as sanitary pit privies, portable toilets, incinerating toilets, composting toilets, and related sewage disposal systems may be approved. Due to their limited capacities, these systems are restricted to receive excreta only. Since such systems require regular service and maintenance to prevent their malfunction and overflow, they shall only be used where the local health department approves such use. Typical locations of non-waterborne systems are rural camps, seasonal recreation areas, construction sites, public gatherings, and similar transient or temporary locations.

1. Portable toilets may be approved by county health departments for temporary or transient locations where numbers of people congregate for periods of short duration for a specified length of time. A contract for maintenance shall be provided in writing to the county health department prior to approval.

2. Sanitary pit privy installation shall be permitted only in remote locations, but in no case shall such installation be permitted for buildings with indoor plumbing and where water under pressure is located in the structure. Construction of the pit privy will be in compliance with

   a. **FIGURE 1&2**.

SOURCE: Miss Code Ann. §41-67-3

Rule 5.10.2. **Construction:**

1. There shall be maintained a minimum of two feet separation between the bottom of the privy vault and indicators of seasonal water (gray mottles).

2. The privy shall be a minimum of 100 feet, downgrade, from any potable water source.

3. The privy shall be located 100 feet from sensitive waters.

4. The privy shall be constructed to prevent surface water from running into the pit.

5. When the pit becomes filled to within sixteen inches of the ground surface, a new pit shall be excavated and the old pit shall be backfilled to the surface.

SOURCE: Miss Code Ann. §41-67-3

Rule 5.10.3. **Registration:** Manufacturers of non-waterborne toilets that incorporate mechanical or non-mechanical technology for the collection and/or treatment of human excreta must submit documentation to the Division of Sanitation verifying the performance of their product. Upon approval, these systems will be placed on an approved list of registered systems.

SOURCE: Miss Code Ann. §41-67-3

Figure 1 – Side View of Pit Privies

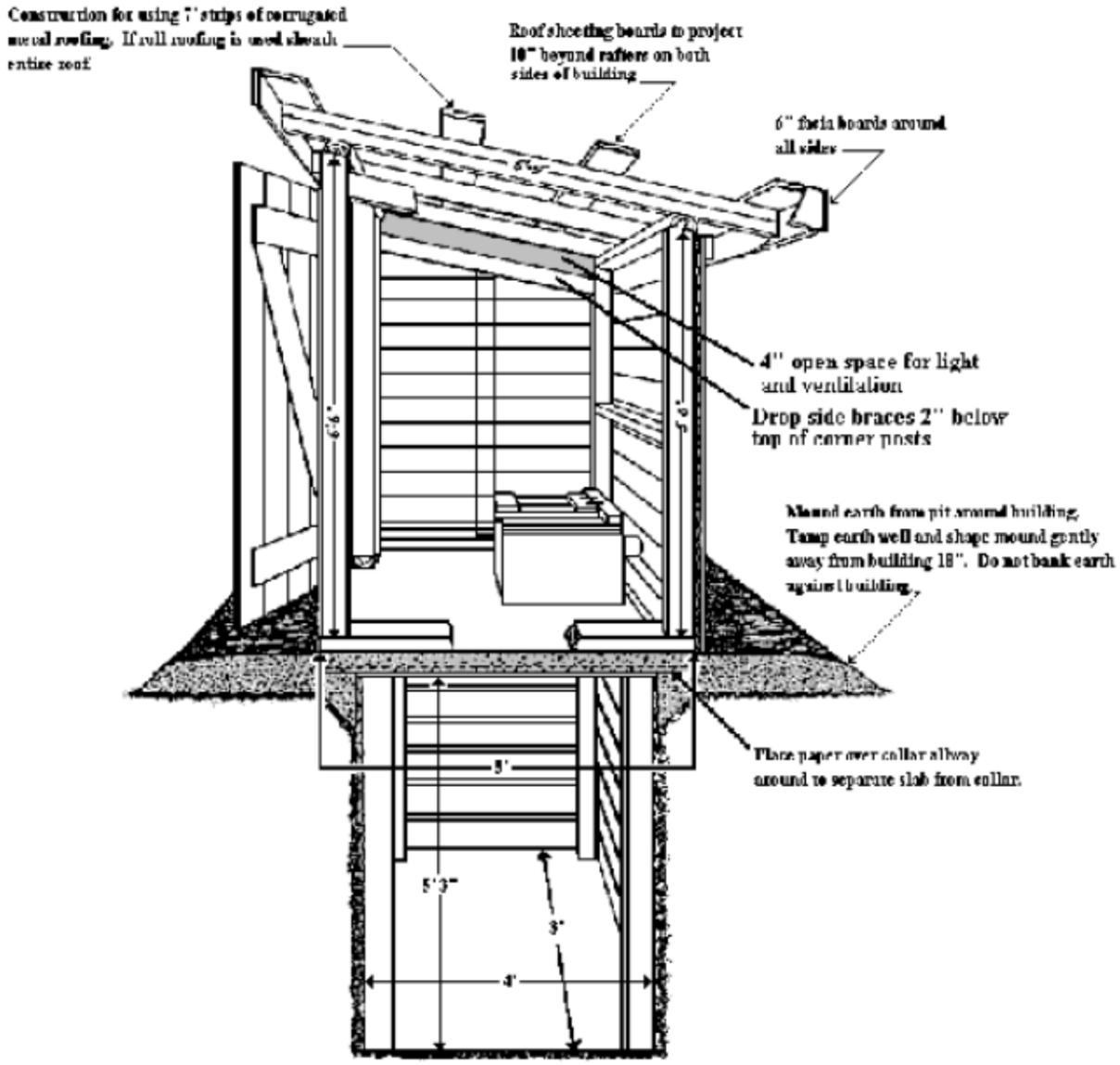

SOURCE: Miss Code Ann. §41-67-3

Figure 2 – Details of Pit Privies

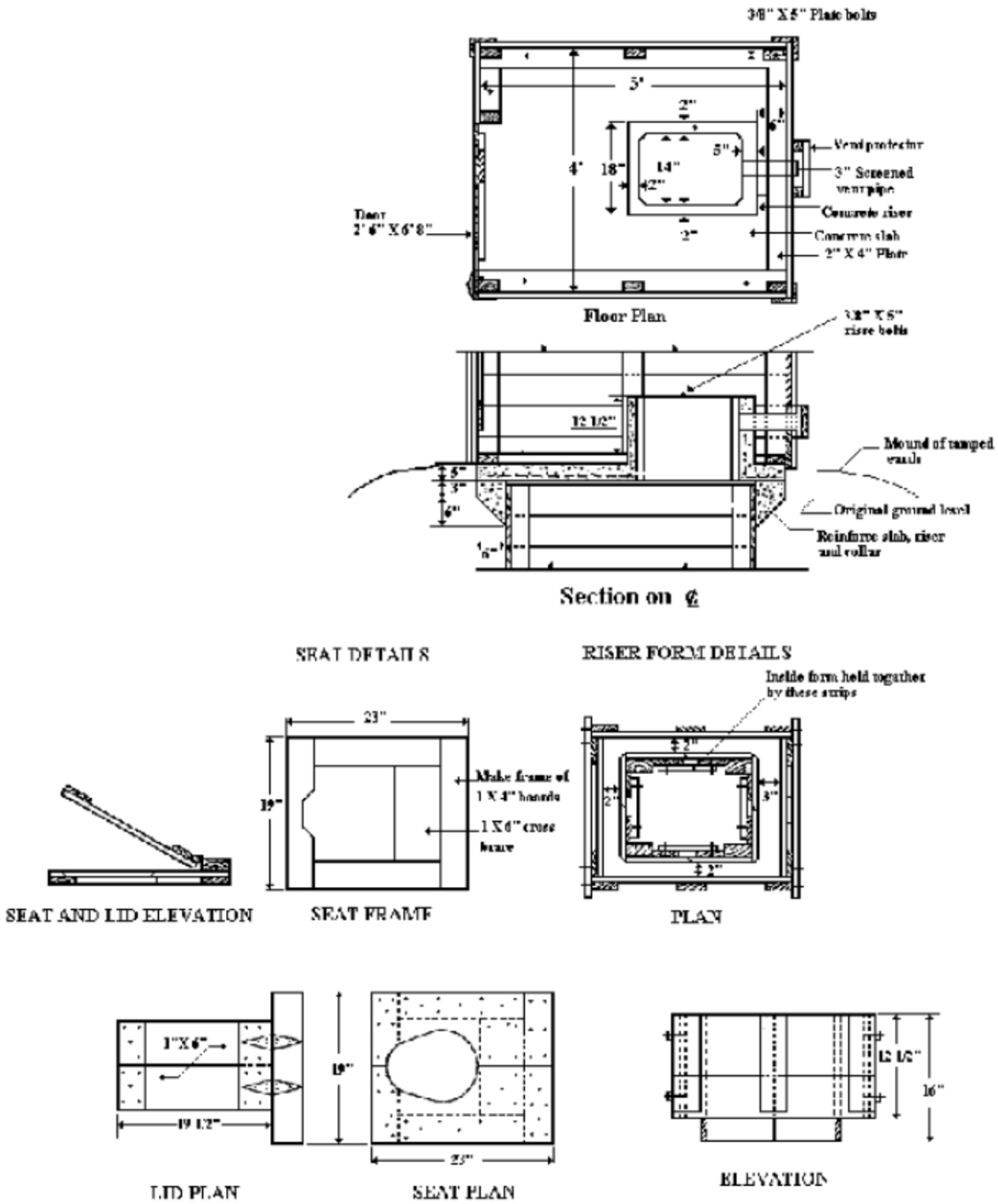

SOURCE: Miss Code Ann. §41-67-3

Chapter 6. DISINFECTION

Rule 6.1.1. **Introduction:** The discharge of treated wastewater shall be disinfected when the effluent will be disposed of by means of a surface discharge (Overland Discharge or Spray Irrigation). Individual On-site Wastewater Disposal Systems that utilize surface discharge shall have an approved method of effluent disinfection prior to disposal.

The most common disinfect is chlorine. Other methods of wastewater disinfection are ultra-violet and ozone.

SOURCE: Miss Code Ann. §41-67-3

Rule 6.1.2. **Definitions:**

1. Advanced Treatment System (ATS) – An Individual On-site Wastewater Disposal System that treats and complies with Section **41-67-10**. Section **41-67-2(a)**

2. Chlorine – a highly irritating, greenish-yellow gaseous halogen, capable of combining with nearly all other elements, produced principally by electrolysis of sodium chloride and used widely to purify water, as a disinfectant and bleaching agent, and in the manufacture of many important compounds including chloroform and carbon tetrachloride.

3. Chlorinator – a device that allows the treated effluent to pass around and over calcium hypochlorite tablets or the treated effluent is dosed with a specific amount of liquid chlorine by the use of an approved dispersal method.

4. Chlorine Contact Chamber –chamber designed to provide a minimum of 1 hour detention time at the peak design flow.

5. Chlorine (liquid) – an aqueous solution of calcium hypochlorite used as a disinfection agent.

6. Chlorine (tablet) – a solid form of calcium hypochlorite, a common disinfectant. These tablets dissolve in the wastewater, releasing the hypochlorite, which then becomes hypochlorous acid, the primary disinfectant.

7. Chlorine Residual – free chlorine remaining after the chlorination process has occurred.

8. Disinfection – treatment to destroy harmful microorganisms and viruses.

9. Feeder Tube – a device which holds Chlorine tablets in place in order to contact effluent.

10. Ozone – an unstable, poisonous allotrope of oxygen, O_3, which is formed naturally in the ozone layer from atmospheric oxygen by electric discharge or exposure to ultraviolet radiation, also produced in the lower atmosphere by the photochemical reaction of certain pollutants. It is a highly reactive oxidizing agent used to deodorize air, purify water, and treat industrial wastes.

11. Pathogen – An agent that causes disease, especially living microorganisms such as bacteria, viruses, or fungus.

12. Swimming Pool Chlorine – Chlorine made from Trichlorisocyanuric acid instead of calcium hypochlorite. **These tablets are not acceptable for use in On-site systems.** They do not dissolve as quickly as wastewater grade tablets and do not treat effluent as required. Also, if not continually immersed in water, these tablets can be explosive due to the release of nitrogen chloride gas.

13. Ultra-violet disinfection – disinfection device that uses ultra-violet light source to eliminate or destroy bacteria, viruses and other pathogenic organisms.

14. Ultra-violet light – radiation lying in the ultra-violet range; wave lengths shorter than light but longer than X-rays

SOURCE: Miss Code Ann. §41-67-3

Rule 6.1.3. **Design**: It is important that wastewater be adequately treated prior to disinfection. The effectiveness of a disinfection system depends on the characteristics of the wastewater, the amount of time the microorganisms are exposed to the disinfectant, and the chamber configuration. The design for each type of disinfection is as follows:

1. Chlorine Tablet or Liquid

   a. The Chlorine Contact Chamber must meet the following requirements:

      i. Constructed from concrete, fiberglass or polyethylene in accordance with *Appendix 01*.

      ii. Constructed to withstand the earth pressures encountered and able to withstand the chemical effects of chlorine and wastewater.

      iii. Equipped with baffles or provided with an inlet to provide adequate mixing and contact of chlorine and effluent. The inlet and outlet must be Schedule 40 PVC pipe, 4 inches in diameter with the outlet tee extending 6 inches from the bottom of the chamber. (Figure I)

      iv. Designed and located to have access a minimum of 6 inched above final grade.

      v. Provide 65 gallons (minimum) capacity or 1 hour retention.

      NOTE: If the chlorine contact chamber is an integral component part of the design of the Advanced Treatment System the efficiency shall be certified by the third party certifying entity.

      vi. Sealed (water-tight) to prevent the entry of surface or ground water. It is recommended that the outlet be placed above any seasonal water tables as indicated by gray mottles. An approved

sealant shall be applied to the lid, inlet, outlet and access opening to prevent groundwater and surface water intrusion.

vii. Consideration will be given to 2 flow-through units with common-wall construction so that each side satisfies the detention requirements. The chlorine feed rate will be proportioned in accordance with the flow and the chlorine demand of the wastewater. Adequate mixing during the chlorine contact period will be insured by the installation of adequate baffling.

viii. Pumped periodically for sludge accumulation and properly disposed.

b. The feeder tube and liquid chlorinator dosing compartment must meet the following requirements:

i. Installed level on undisturbed earth or backfilled with sand.

ii. Charged with a minimum of 3 calcium hypochlorite chlorine tablets or the dosing compartment is 1/2 filled with liquid chlorine.

iii. Equipped with a method for removal. The method of removal must be within 3 inches of the chlorinator opening.

iv. Constructed of Schedule 40 PVC pipe, 3 inches in diameter and provide removal of all chlorine tablets when feeder tube is removed from chlorinator. (Figure II)

v. Childproof and Tamper resistant, or limited access cover.

2. Ultra-violet

a. The main components of a ultra-violet disinfection system are mercury arc lamps, a reactor, and ballasts. The source of the ultra-violet radiation is either the low-pressure or medium-pressure mercury arc lamp with low or high intensities.

b. The optimum wavelength to effectively inactivate microorganisms is in the range of 250 to 270 nm. Low-pressure lamps emit essentially monochromatic light at a wavelength of 253.7 nm. Standard lengths with diameter of 1.5 – 2.0 cm. The ideal lamp wall temperature is between 95 and 122°F.

c. The effectiveness of a ultra-violet disinfection system depends on the characteristics of the wastewater, the intensity of the ultra-violet radiation, the amount of time the microorganisms are exposed to the radiation, and the reactor configuration.

d. All ultra-violet disinfection must provide a flow either parallel or perpendicular to the lamps and have a ballast or control box which provides a starting voltage for the lamps and maintains a continuous current.

e. There are two types of ultra-violet disinfection reactor configurations that exist:

   i. Contact: This reactor contains a series of mercury lamps are enclosed in quartz sleeves to minimize the cooling effects of the wastewater. The lamps are placed parallel or perpendicular to the direction of the wastewater flow. Flap gates or weirs are used to control the level of the wastewater.

   ii. Noncontact: This reactor contains mercury lamps suspended outside the transparent conduit, which carries the wastewater to be disinfected.

f. The ultra-violet disinfection must provide the following:

   i. Necessary hydraulic properties for maximize exposure to ultra-violet radiation.

   ii. Necessary intensity of ultra-violet radiation needed for effective inactivation of microorganisms.

   iii. Necessary radiation for peak flow condition, suspended or colloidal solids, initial bacterial density and any other physical and chemical parameters (i.e., hardness, iron, pH or TSS).

g. The ultra-violet disinfection system must ensure that sufficient radiation is transmitted to the organisms to render them sterile. All surfaces between the radiation and target organisms must be clean, and the ballast, lamps, and reactors must be functioning at peak efficiency.

h. The sleeves or tubes must be cleaned regularly by mechanical wipers, ultrasonics, or chemicals. The cleaning frequency is dependent upon the wastewater characteristics produced by the Advanced Treatment System.

i. The retention time for complete inactivation will be determined by size of reactor and lamp intensity.

j. All disinfection systems certified by *American National Standards Institute/National Sanitation Foundation International Standard 46* will be accepted for registration in Mississippi provided documentation is submitted with application.

k. All disinfection systems not certified by *American National Standards Institute/National Sanitation Foundation International Standard 46* must submit all documentation to determine compliance with 102.03 through 102.07.

3. Ozone

a. These products will be reviewed by the Division in accordance with design, construction and installation for the specific location and usage.

b. These products will only be approved by the Division after certification by a Professional Engineer registered in the State of Mississippi after having shown it can be constructed and installed by the Certified Installer.

c. This product will require that the Professional Engineer train and certify the Maintenance Provider in it routine operation and maintenance, as well as safety guidelines.

SOURCE: Miss Code Ann. §41-67-3

Rule 6.1.4. **Location/Setbacks:**

1. The disinfection system shall not be located in an area that collects surface water.

2. The disinfection system shall be installed according to the following setbacks:

a. 5 feet from foundations, deck, out-building, etc

b. 10 feet from property lines

c. 50 feet from any public, private or individual potable water source

3. No vehicular traffic shall be allowed over the tank(s), disinfection system or any part of the Individual On-site Wastewater disposal System.

4. Tanks and disinfection system shall not be located under dwellings or other permanent structures.

SOURCE: Miss Code Ann. §41-67-3

Rule 6.1.5. **Treatment:**

1. Tablets shall not be in contact with treated effluent except during times of flow. Other designs that meet the criteria of proper effluent contact will be considered suitable after review by the Division.

2. The level of chlorination is a chlorine residual of not less than 0.1 to no greater than 1 ppm (parts per million) or a maximum of 400 fecal colonies/100 ml.

Figure 1
Chlorine Contact Chamber
65 gallon minimum

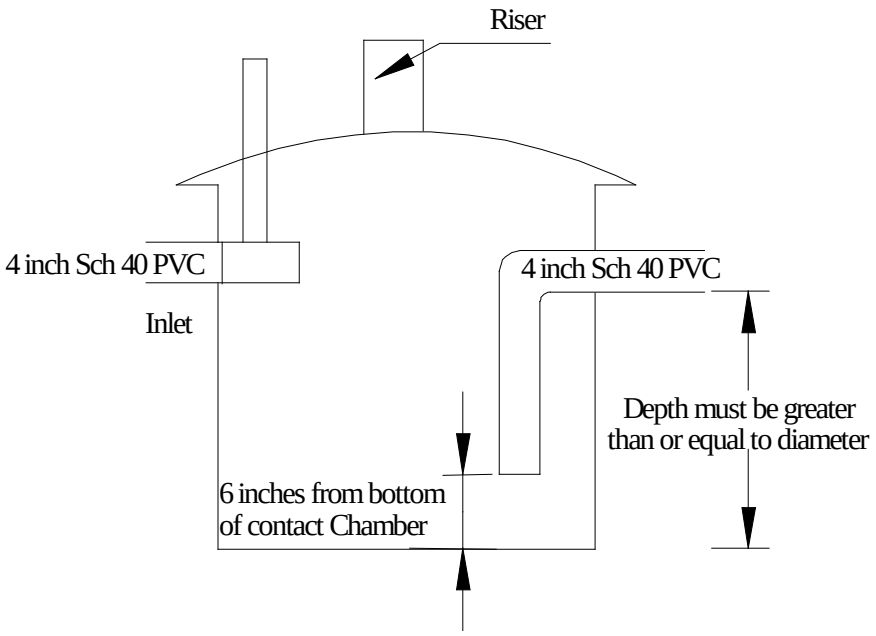

SOURCE: Miss Code Ann. §41-67-3

Figure 2 Cross Section of Chlorinator Feeder Tube

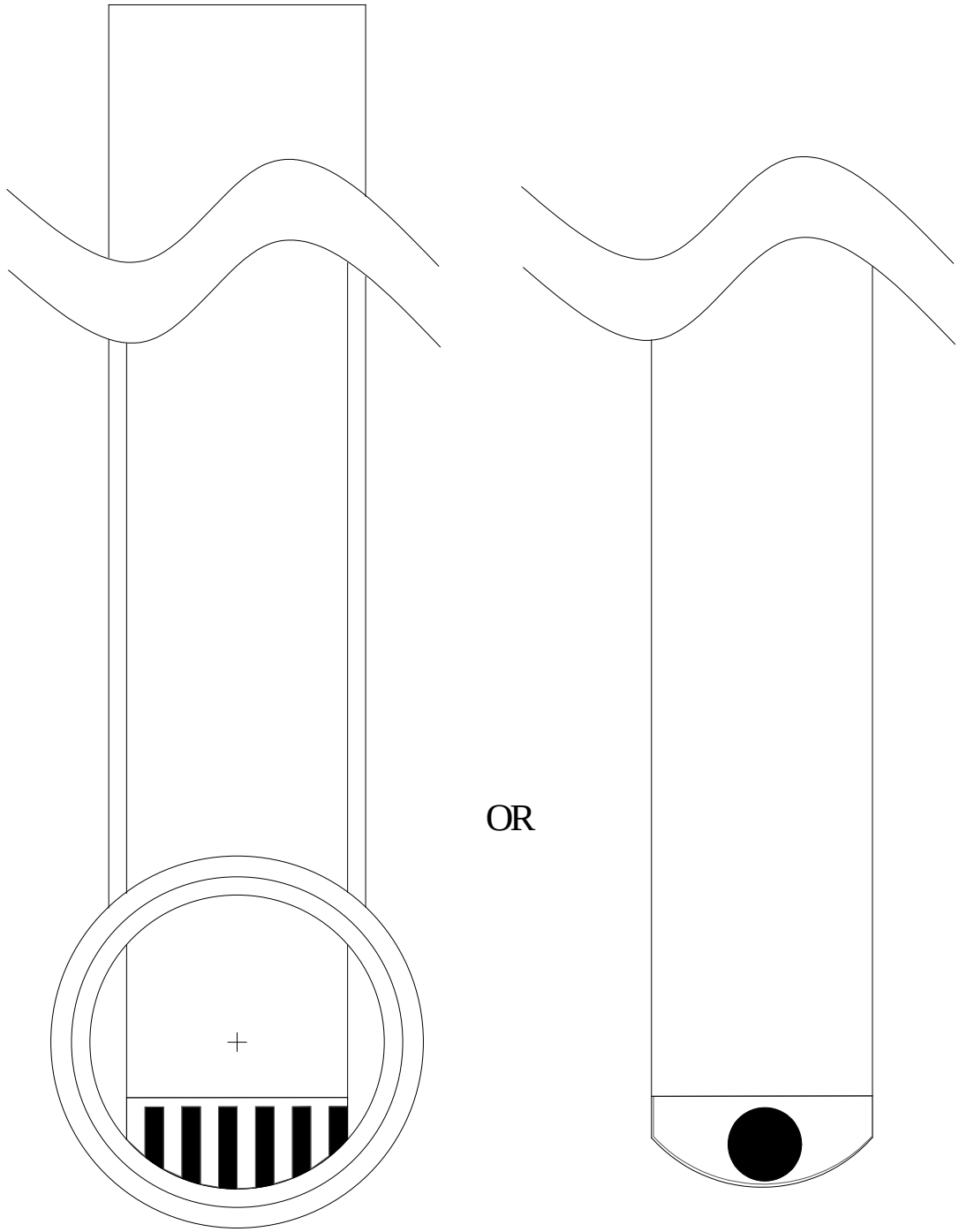

SOURCE: Miss Code Ann. §41-67-3

CHAPTER 7. FEES

Rule 7.1 The Department shall access fees in the amount for the following processes. In the discretion of the Board, a person shall be liable for a penalty equal to one and one-half (1-1/2) times the amount of the fee due and payable for failure to pay the fee on or before the date due, plus any amount necessary to reimburse the cost of collection. All fees due the Department shall be paid online or by check or money order.

SOURCE: Miss Code Ann § 41-67-3

Subchapter 1. ADMINISTRATIVE

1. Soil and Site Evaluation

   a. Permit/Recommendation $100.00
   b. Existing System Inspection.....$100.00

2. Final Approval

   a. Design-based System $97.50
   b. Performance-based System $325.00
   c. Re-inspection (per inspection).....$32.50

3. Examination $130.00

4. Registration(Certification and CEU/PDH) $32.50

5. Return Check $65.00

6. Late ..... 1/2 certification fee

7. Re-Evaluation by Program Staff $50.00

Subchapter 2. CERTIFICATION

1. Certified Manufacturer

   a. Product Review $325.00
   b. Certification of Registration.....$100.00

2. Certified Professional Evaluator

   a. Initial Certification $780.00
   b. Renewal Certification.....$650.00

3. Certified Installer

a. Initial Certification $50.00
b. Renewal Certification.....$50.00

4. Certified Pumper

a. Initial Certification $50.00
b. Inspection (by county)..... $32.50/vehicle
c. Renewal Certification.....$50.00

Subchapter 3. REVIEW

1. Subdivision .....$325.00 + $6.50/lot
2. Commercial Development..... $50.00 + $2.00/lot
3. Commercial Establishment.....$50.00
4. Submittal (PE or CPE)

a. Design-based System $130.00
b. Performance-based System $325.00
c. 1500 gpd or more $325.00
d. High strength wastes streams $325.00

5. Commercial Wastewater System Review.....$250.00

SOURCE: Miss Code Ann § 41-67-3

Rule 7.2 Fees authorized under this section shall not be assessed for any system operated by state agencies or institutions, including, without limitation, foster homes licensed by the State Department of Human Services. The fee authorized under this section shall not be charged again after payment of the initial fee for any system that has been installed in accordance with this chapter, within a period of 24 months following the date that the system was originally installed.

SOURCE: Miss Code Ann § 41-67-3